# The NFMCC R&D Program

The UKNF Review

Rutherford Appleton Laboratory

July 21, 2008

Harold G. Kirk
Brookhaven National Laboratory

# The IDS Baseline

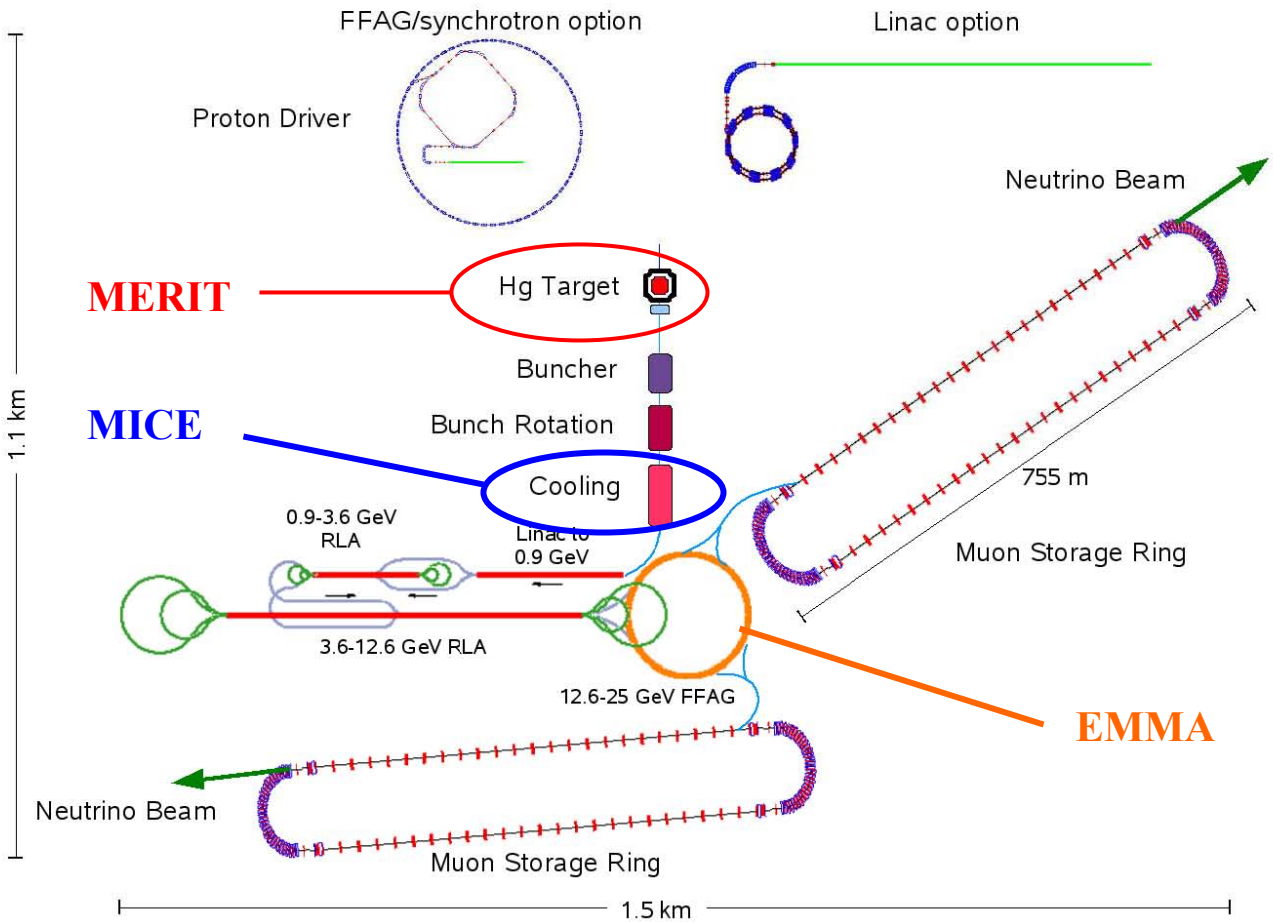


**NFMCC simulations support the goal of an RDR by 2012**

# The MERIT Experiment

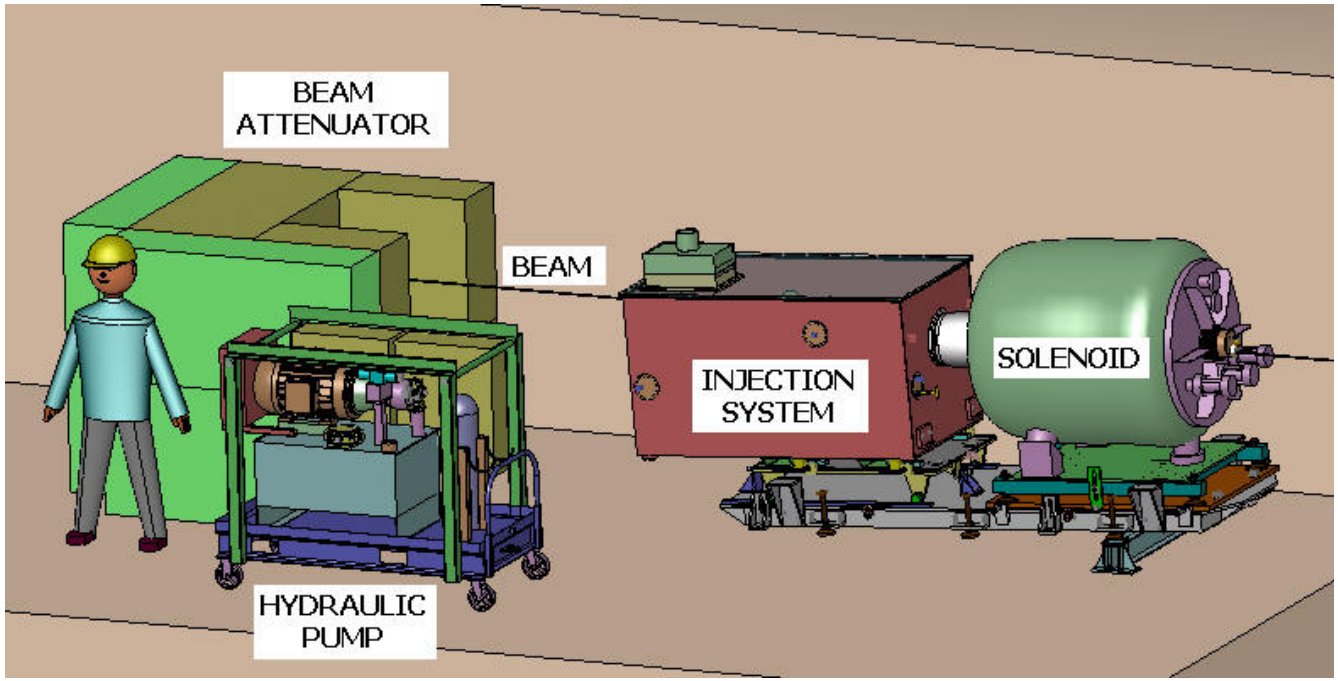


**Purpose:**

**To provide a proof-of-principle for the NF/MC 4-MW target concept.**

**To study the effects of high-magnetic fields on the beam/jet interaction.**

## MERcury Intense Target

# Sectional view of the MERIT Experiment

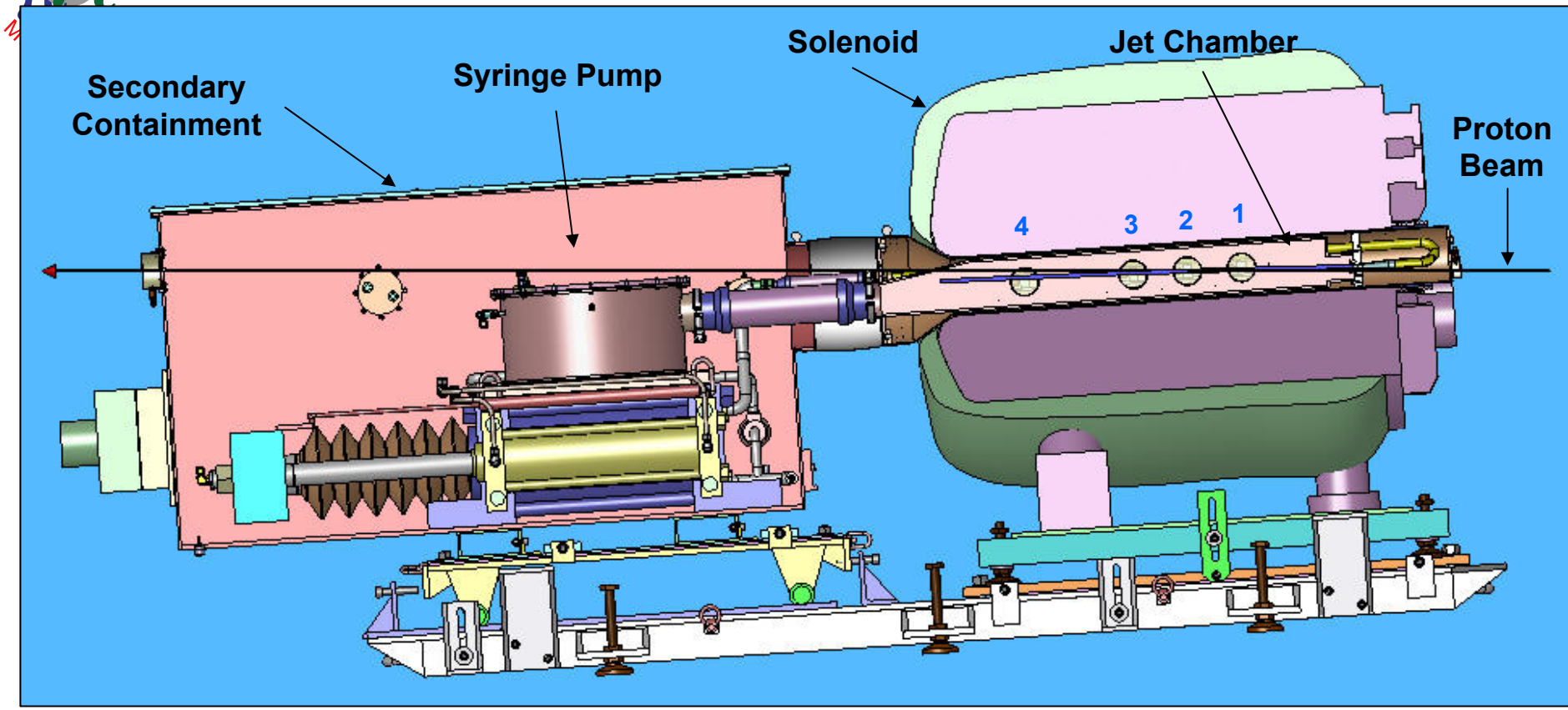


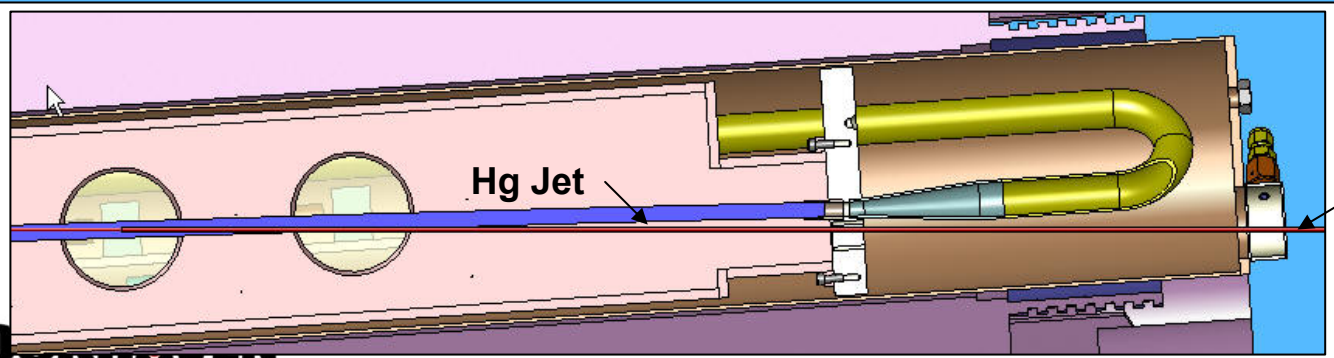

# 15TP 14GeV Proton Beam

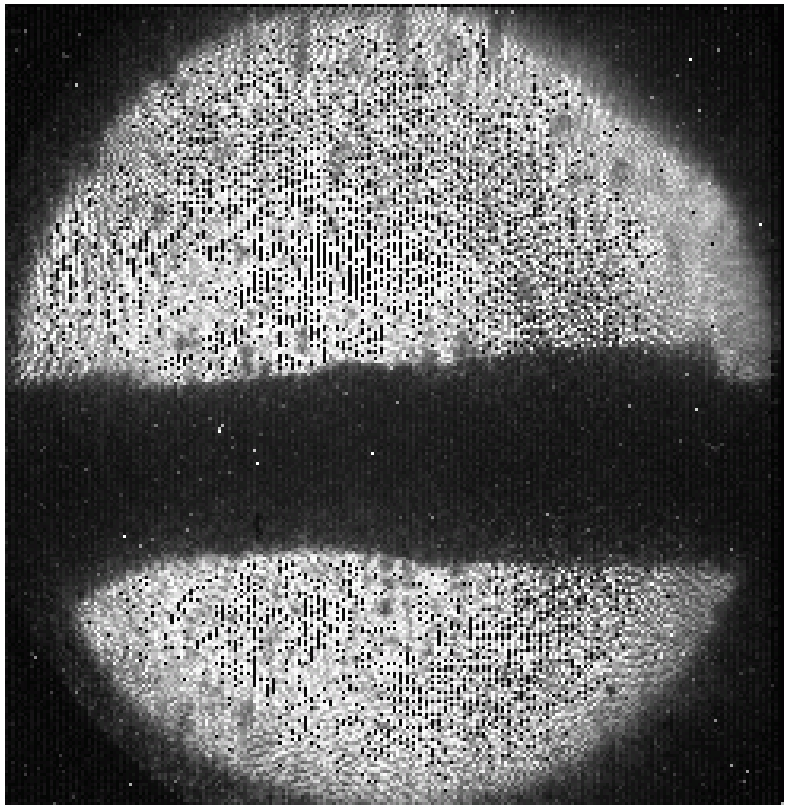

**Oct. 27, 2007**
**Solenoid Field at 5T**

**Viewport 2**

**Beam 5016, Hg 15m/s, 100μs/frame, Total 1.6ms**

# Viewport 3: Jet/proton interaction

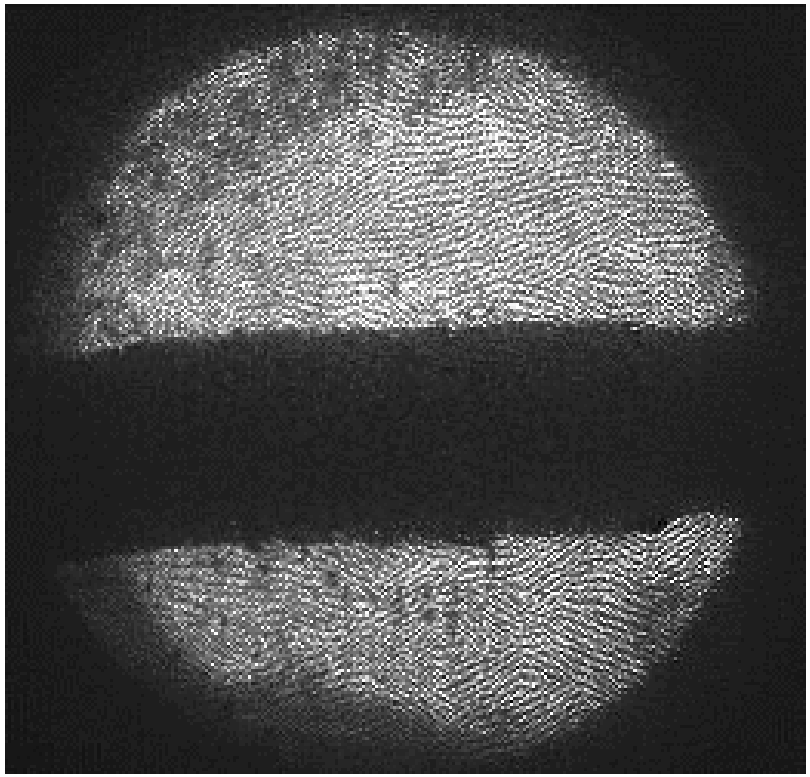

1 cm

**Shot 16014**
- **14 GeV**
- **$12 \times 10^{12}$ protons/pulse**
- **B field = 10 T**
- **500µs/frame**

**Disruption Length =16.5cm**

# Extent of Jet Disruptions

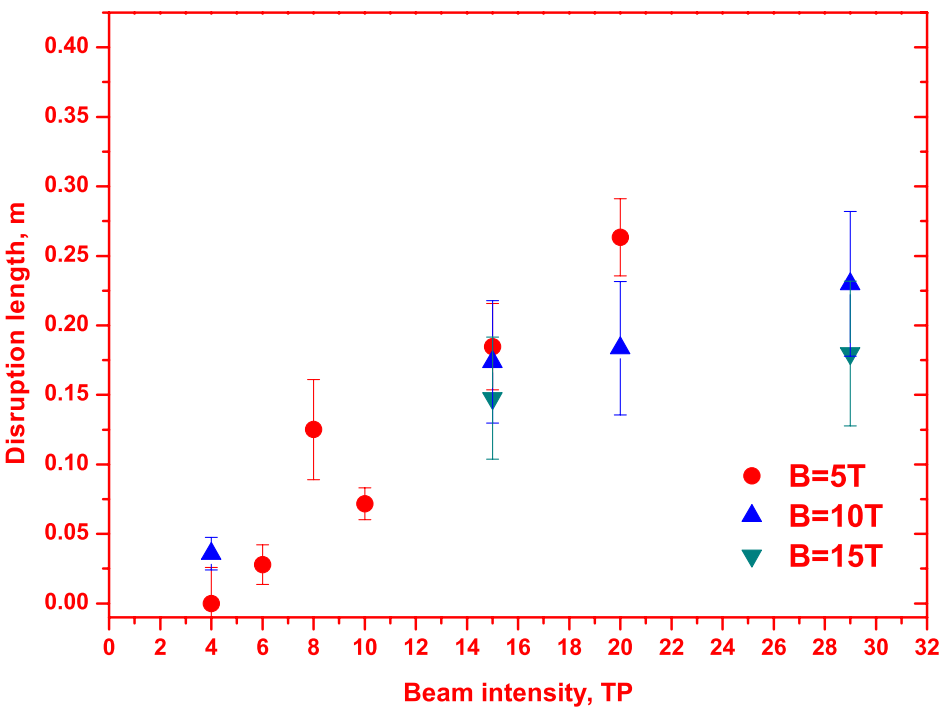


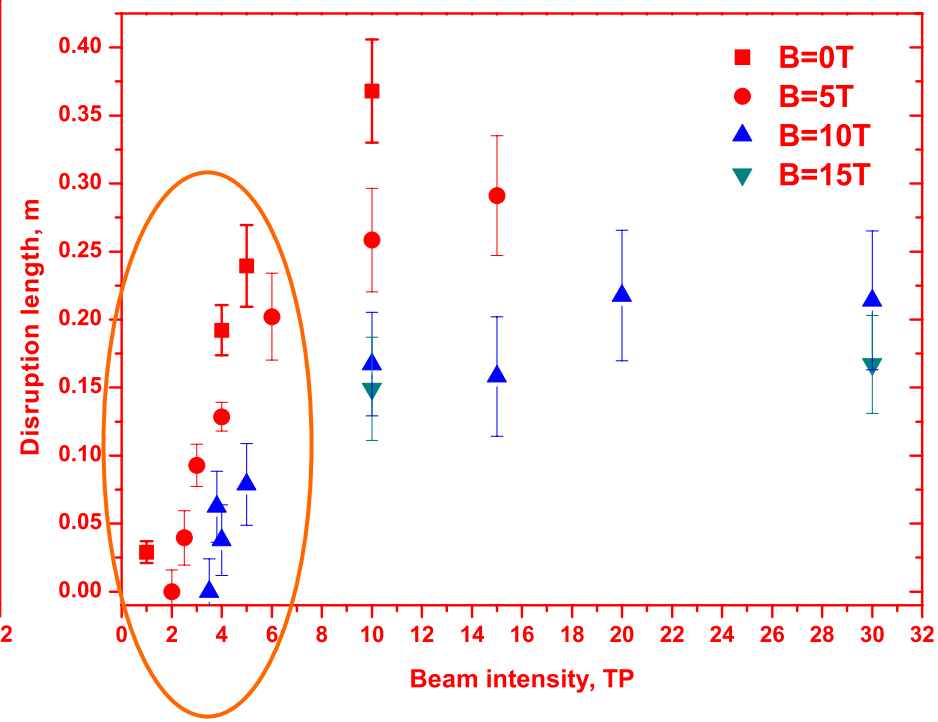


**14 GeV**

**Note influence of B on threshold**

**24 GeV**

# Disruption Development

**24 GeV Proton Beam 10TP**

**50μs at 0T (agrees with AGS E951 result)**

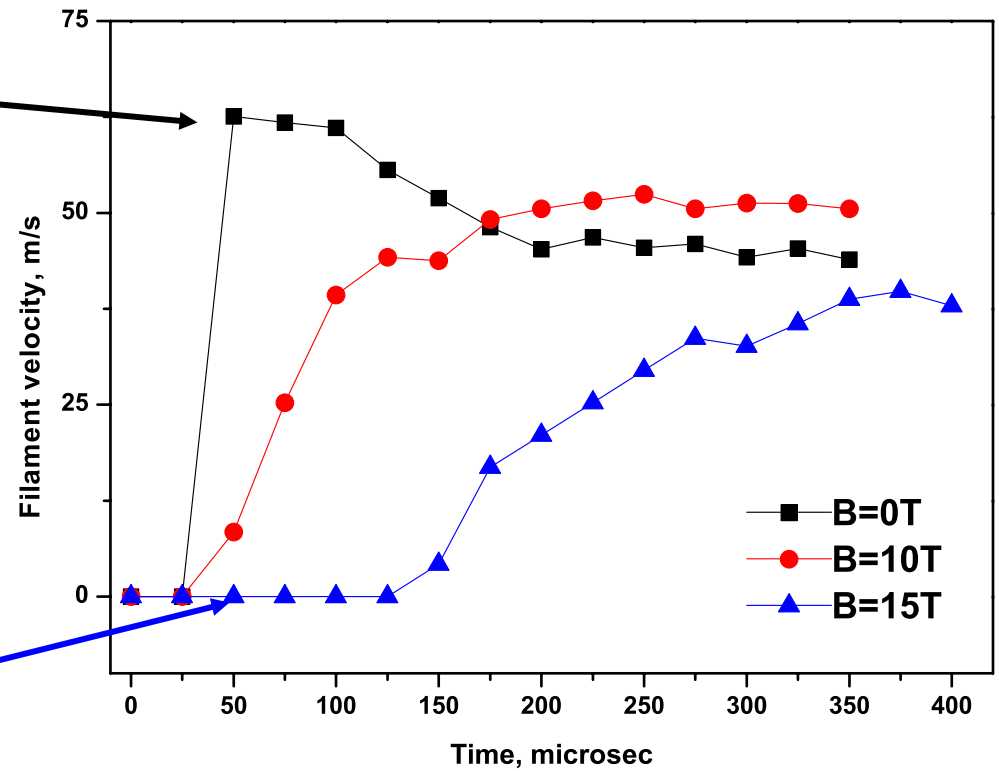


**150μs at 15T (new result)**

# The MERIT Bottom Line

**The Neutrino Factory/Muon Collider target concept has been validated for 4MW 50Hz operations.**

# The Muon Ionization Cooling Experiment (MICE)

**Purpose: To demonstrate the technology required to reduce the produced muon phase space**

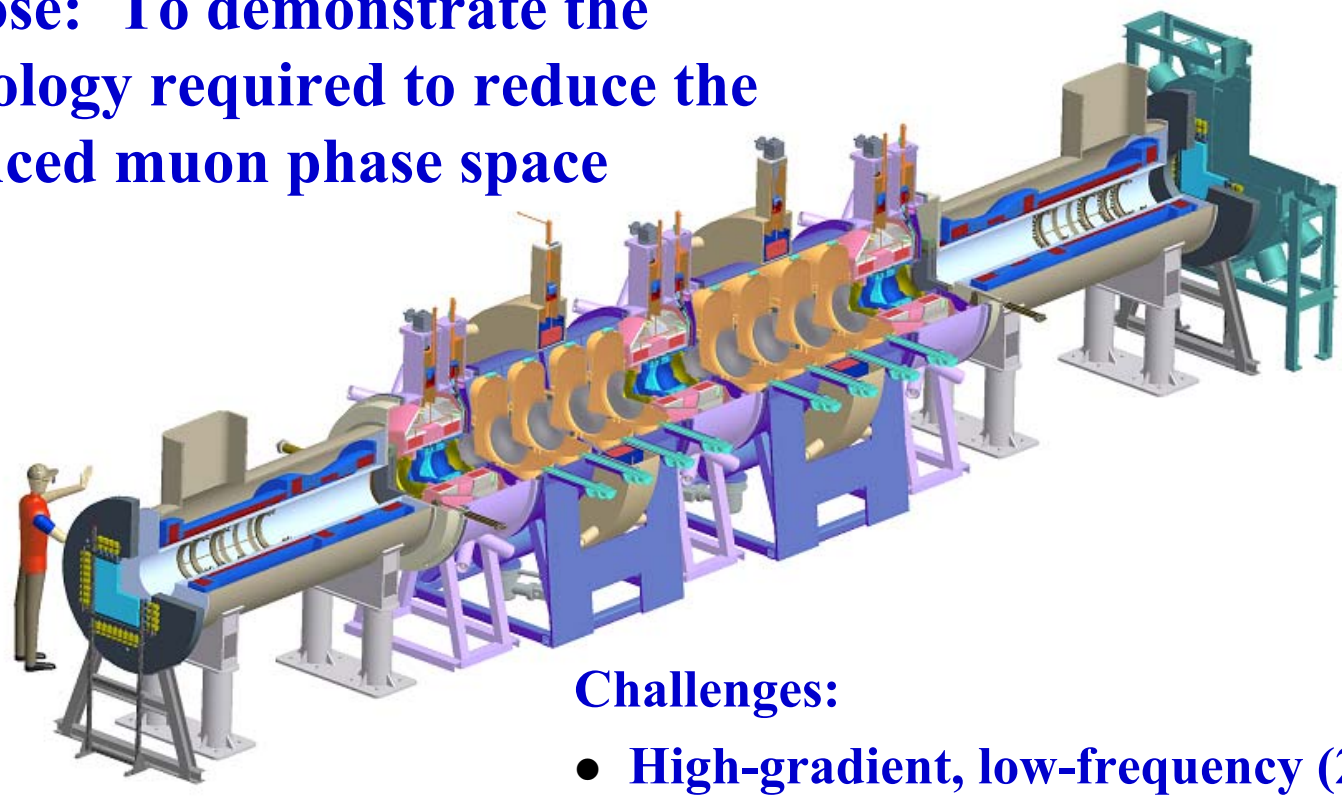

**Challenges:**

- **High-gradient, low-frequency (201MHz) rf cavities operating in high-magnetic fields (~3T)**
- **Design and safely operated $LH_2$ absorbers**

BROOKHAVEN NATIONAL LABORATORY

Harold G. Kirk

# NFMCC Support of MICE

## Hardware

- RF modues with SC coupling coils
- 2 Cherenkov Counters
- Fiber-tracking readout system
- 2 Spectrometer Solenoids
- Beam Monitors
- LiH Absorbers

## Intellectual/Personnel Support

- Deputy Spokesperson
- Editorial and Executive Board memberships
- 4 Post-docs
- Engineering for supported hardware

# EMMA at Daresbury Laboratory

**Purpose:**

**Demonstrate the beam dynamics of non-scaling FFAGs**

**Challenge:**
**No non-scaling FFAGs have previously been designed, built and operated**

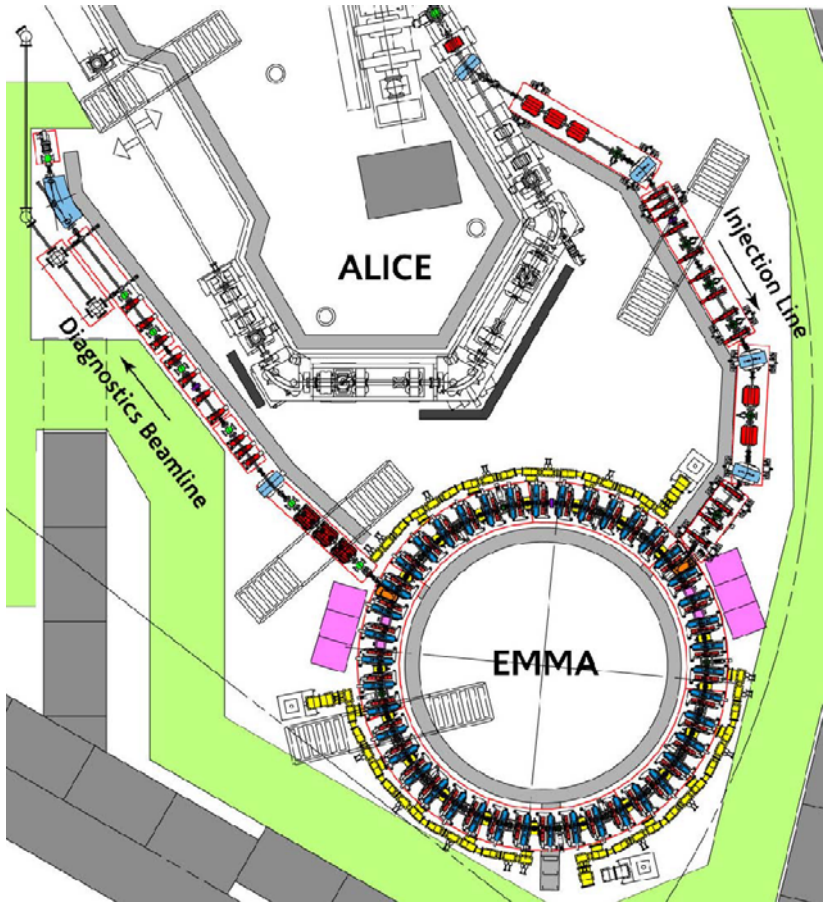


**EMMA is an electron analog machine designed for 10-20MeV/c operation**

Harold G. Kirk

# NFMCC Support for EMMA

**Intellectual Support from Collaboration members:**

- **Scott Berg (BNL)**
- **Carol Johnstone (FNAL)**
- **Shane Koscielniak (TRIUMF)**

- **Ring Lattice Design**
- **Accelerator Physics oversight**
- **Injection/Ejection Beam Dynamics**
- **Diagnostic System Design**
- **Analysis of collective effects**

# The MUCOOL R&D Program

## Mission

- Design, prototype and test all cooling channel components
  - 201-MHz RF Cavities, $LH_2$ and LiH absorbers, SC solenoids
  - 805-MHz RF studies complement the 201-MHz program
- Support MICE (cooling demonstration experiment)
- Perform beam and engineering test of cooling section components

# RF Testing at the FNAL MTA

## RF breakdown studies with external magnetic fields for 805 and 201-MHz cavities

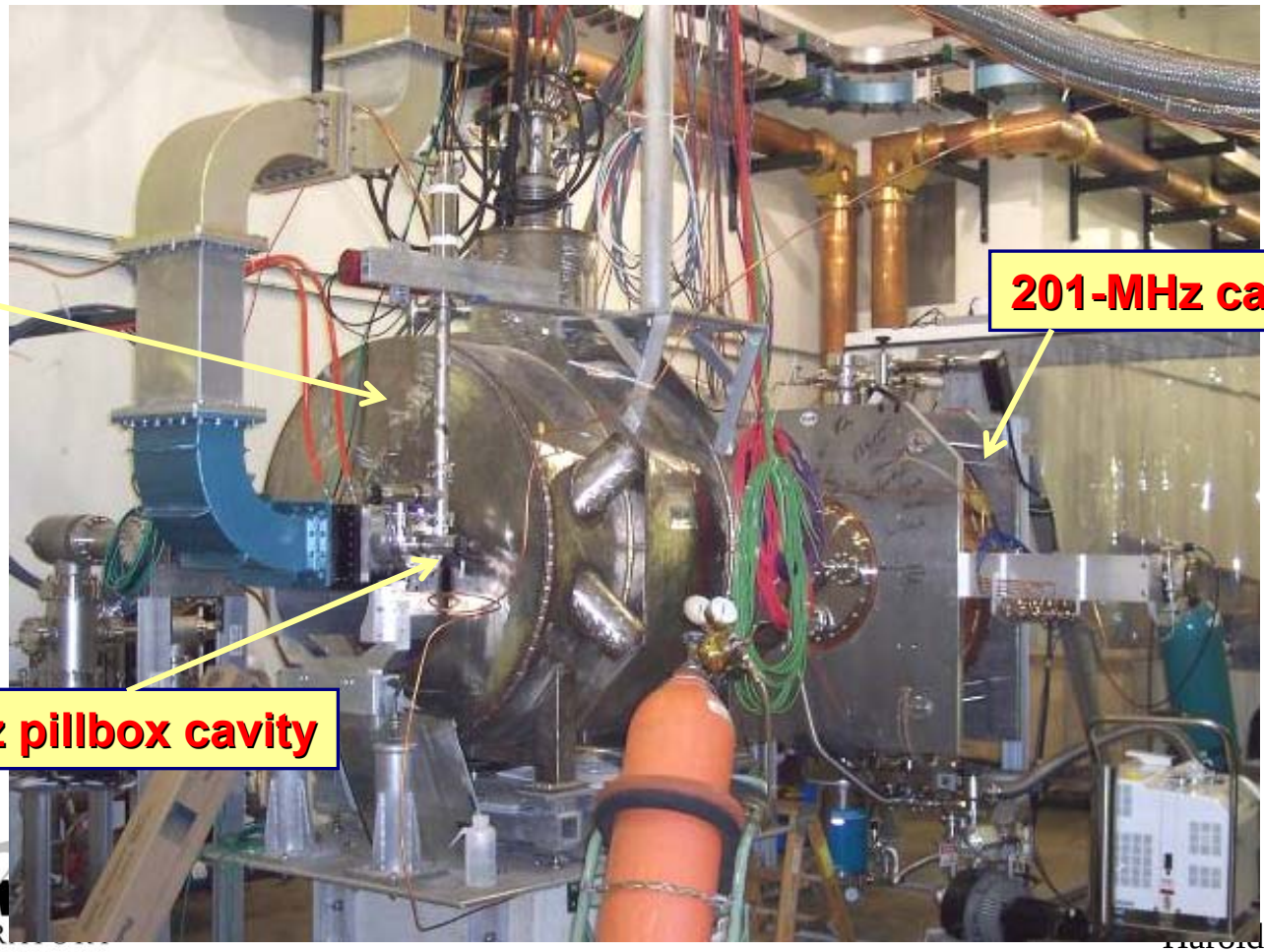

# Initial Results at 805 MHz

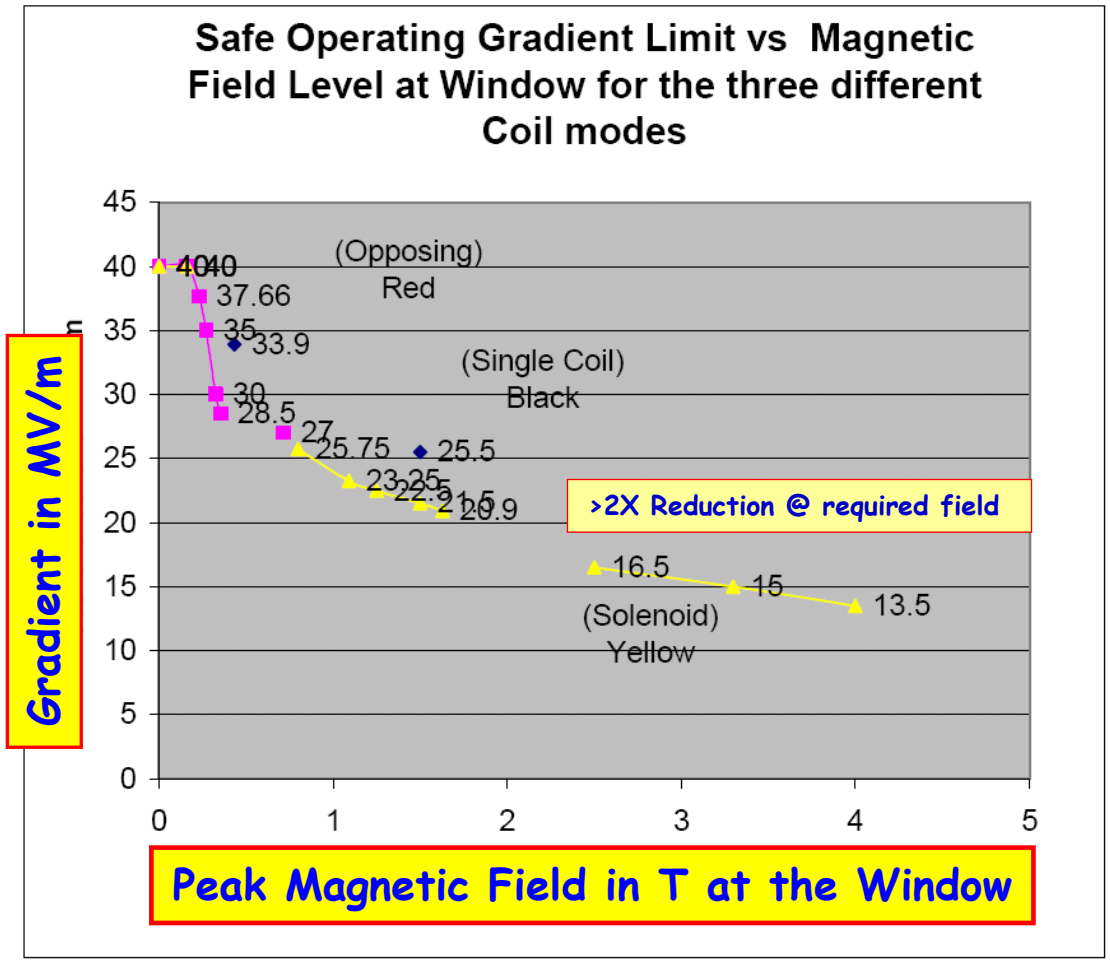


## Application of B Field degrades 805-MHz pilllbox cavity performance

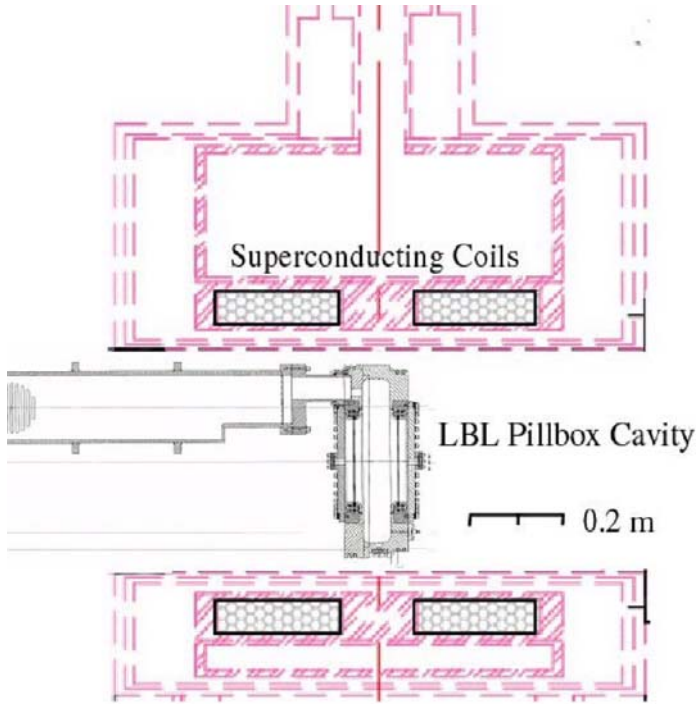


BROOKHAVEN NATIONAL LABORATORY

Harold G. Kirk

# The 201-MHz Prototype Cavity

**Nominal parameters for cooling channels in a muon collider or a neutrino factory**

- ~ 16 MV/m peak accelerating field
- Peak input RF power ~ 4.6 MW per cavity
- Average power dissipation per cavity ~ 8.4 kW
- Be windows
- Average power dissipation per Be window ~ 100 watts

**Cavity quickly attained 19MV/m with no B field**

**MICE requires ≤ 8 MV/m**

# Preliminary 201-MHz Test with B Field

**Multi-pactoring was observed over the entire magnetic field range up to 3.75-T (~ 1.1-T at nearest Be window)**

**14 MV/m achieved at 2.5-T (~ 0.75-T to the nearest curved Be window)**

**We await the arrival of the Harbin Coupling Coil**

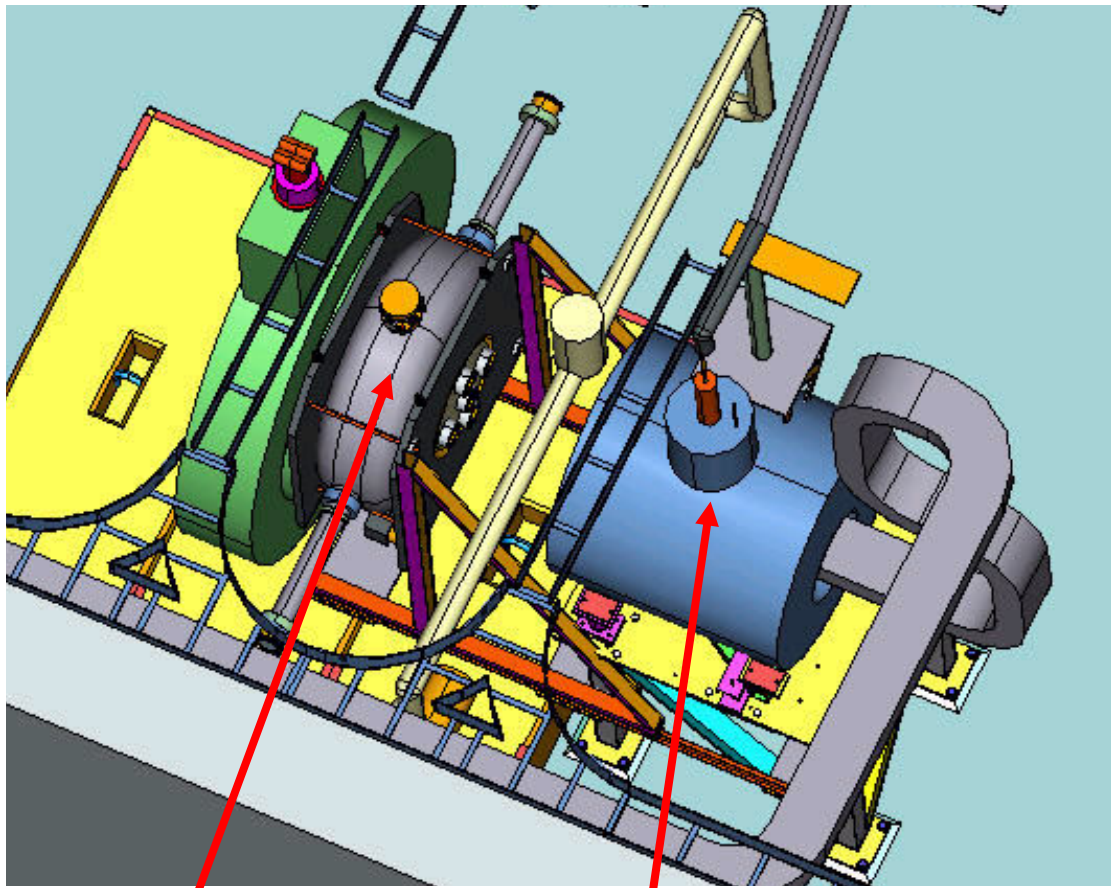

**201-MHz RF Cavity** **5-T Solenoid**

# Mitigation of B Field Effects

**Posible Solutions:**

- **New cooling lattice with low-fields in cavities**
- **ALD-atomic layer deposition**
- **Gas-filled cavities-collaboration with Muons, Inc--further tests to be done in the MCTF beam line**

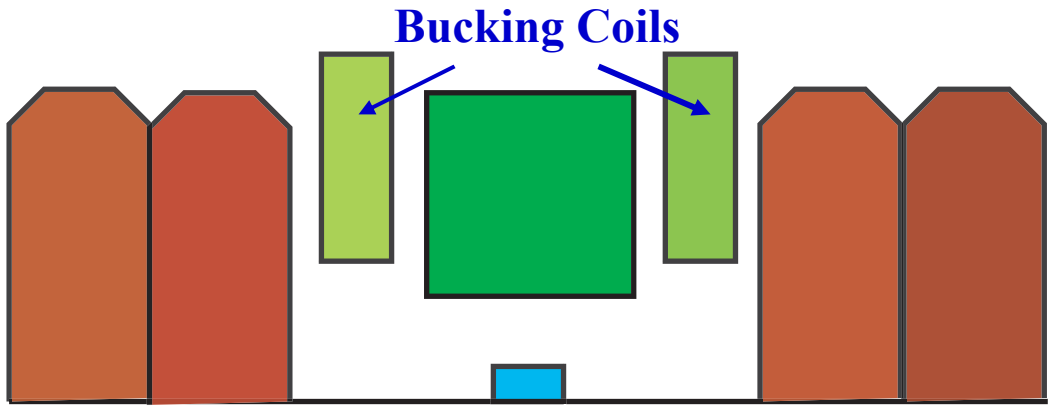


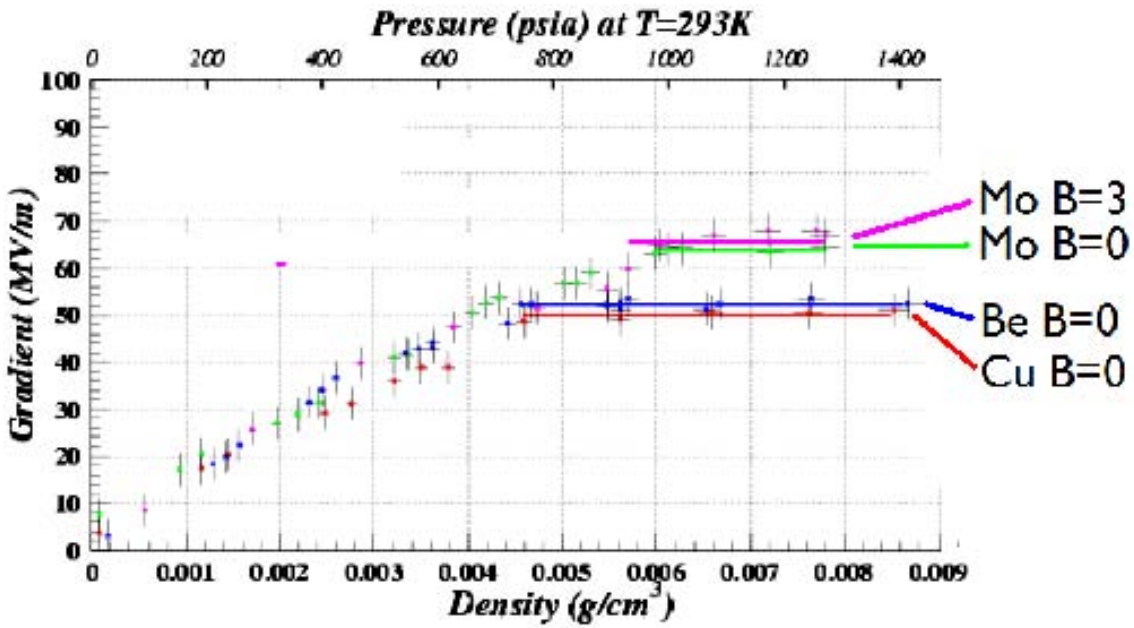


Harold G. Kirk

# Magnetic Insulation (Palmer)

**Move coils into cavity irises**

- **Opposing coils**

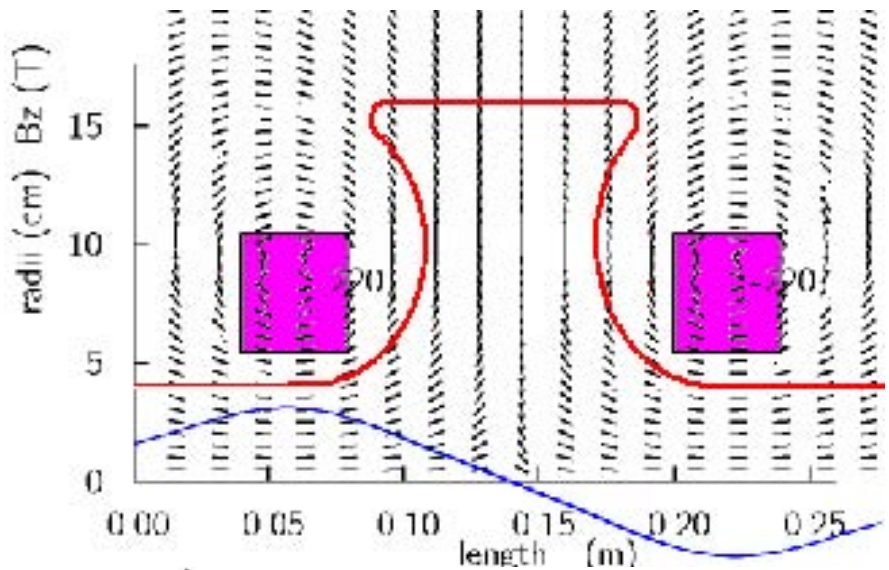


- **Aligned coils with bucking coils**

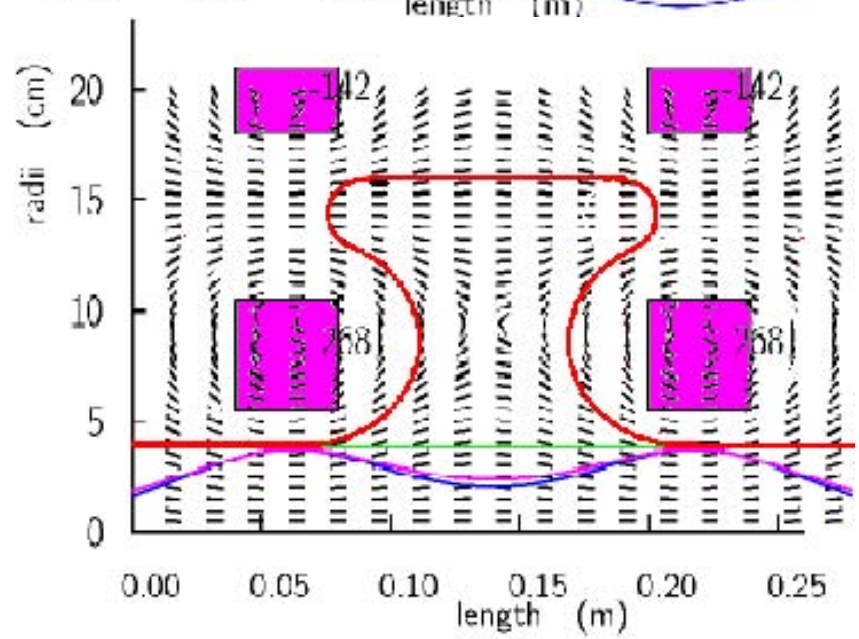


**Magnetic field are parallel to cavity surfaces**

BROOKHAVEN NATIONAL LABORATORY

# Summary

**The NFMCC, along with its international partners, is proceeding with a vigorous R&D program toward the goal of the production, collection, and acceleration of intense muon beams.**

**This program has borne its first fruit:**

**MERIT has achieved its goals of:**

- **Examining the influence of high B field on beam/jet interactions**
- **Validating the NF/MC target concept for 4MW, 50Hz operation**

# Backup Slides

# Initial MERIT Results

**Influence of magnetic field on beam/jet interactions**

- **Jet surface instabilities substantially reduced**
- **Jet disruption diminished**
- **Jet disruption threshold increased**
- **Jet disruption delayed**

**Influence of proton beam structure on beam/jet interactions**

- **Higher beam harmonic structure yields greater disruption**
- **Beam pulses ≥ 6μs arrive as independent new pulses**

# MERIT at the CERN TT2 Line

- 14 and 24 GeV proton beam from the PS
- Up to 30 x $10^{12}$ protons (TP) per 2.5μs spill
- Proton beam spot with r~1.5 mm rms
- 1-cm diameter Hg Jet
- Hg Jet/proton beam off solenoid axis
  - Hg Jet 33 mrad to solenoid axis
  - Proton beam 67 mrad to solenoid axis
- Test 50 Hz operations--20m/s operation
- 15-T pulsed solenoid

Experiment Run Oct/Nov 2007

# The 24 GeV 30TP shot

**Beam pulse energy = 115kJ (A CERN PS record)**

**B field = 15T**

**Jet Velocity = 20 m/s**

**Disruption Length = 17 cm**

**We will replace 2 interaction lengths (28cm)**

**(for Hg $\lambda_I$ = 14cm)**

**Then the jet transport time is 28cm/20m/s = 14ms**

**➔Rep rate of 70Hz**

**➔Proton beam power at that rate is 115kJ *70 = 8MW**

# MTA Beamline

**Collaboration between NFMCC and FNAL Muon Collider Task Force**

**First Beam Fall 2008**

**Initial tests will be with gas-filled RF cavities**