R. Fernow

Accelerator Department
BROOKHAVEN NATIONAL LABORATORY
Associated Universities, Inc.
Upton, NY 11973

CBA Project

Technical Note No. 418

A-PRIME QUADRUPOLE COIL DESIGN

R. Fernow and P. Thompson

June 3, 1983

INTRODUCTION

The early cable quadrupoles (QM-0 thru QM-6) were constructed with the coil design given in TN-329 (H. Hahn, 1981). For mechanical reasons, a small notch was made in the iron at the poles of the quadrupoles. This increases the total b_5 moment to approximately 22×10^{-4}. For the same reasons as led to the developmement of the A-prime dipole, an A-prime quadrupole was developed to reduce this high field b_5. The goal was to shift the b_5 moment down by approximately 20×10^{-4}. Several plausible solutions were found. The final choice was based on ease of winding (particularly convex, spliceless winding which is envisioned for production quadrupoles) and assembly.

COIL GEOMETRY

The coil geometry is shown in Figure 1. It retains the inner coil of the TN-329 design and adds two turns to the outer coil. Specifically, the angular dimensions are:

Coil	Start Angle	End Angle	Number of Turns
Inner #1	0.07	19.60	17
Wedge	19.60	26.02	...
Inner #2	26.02	32.92	6
Outer	0.07	35.01	34
Notch in Iron	36.28	(45.00)	...

FIELD CALCULATIONS

The comparison of field calculations for this design is obscured by two details: 1) the infinite permeability calculations are traditionally done with a mixture of room temperature and 4° K dimensions, 2) the infinite permeability calculations assume cylindrical symmetry for the iron. For the case under consideration, the notch in the iron makes a significant contribution. Thus, the infinite permeability results should be used with caution.

Harmonic	Infinite Permeability	MDP at 100 amps	MDP at 4100 amps
Quadrupole (Gauss/Amp-cm)	2.025	1.974	1.833
b_5 ($\times 10^{-4}$)	-23.3	-3.2	8.1
b_9 ($\times 10^{-4}$)	1.7	-0.4	1.5
b_{13} ($\times 10^{-4}$)	0.0	0.2	0.2

For the quadrupoles measured to date the ends contribute approximately -5 b_5 units. Hence, we expect b_5 to be -8 at injection and +3 at high field.

FIELD CAPTION

Figure 1: A-prime quadrupole coil and iron cross section. Dimensions are centimeters and degrees.

REFERENCE

1. H. Hahn, ISABELLE Technical Note 329 (1981)

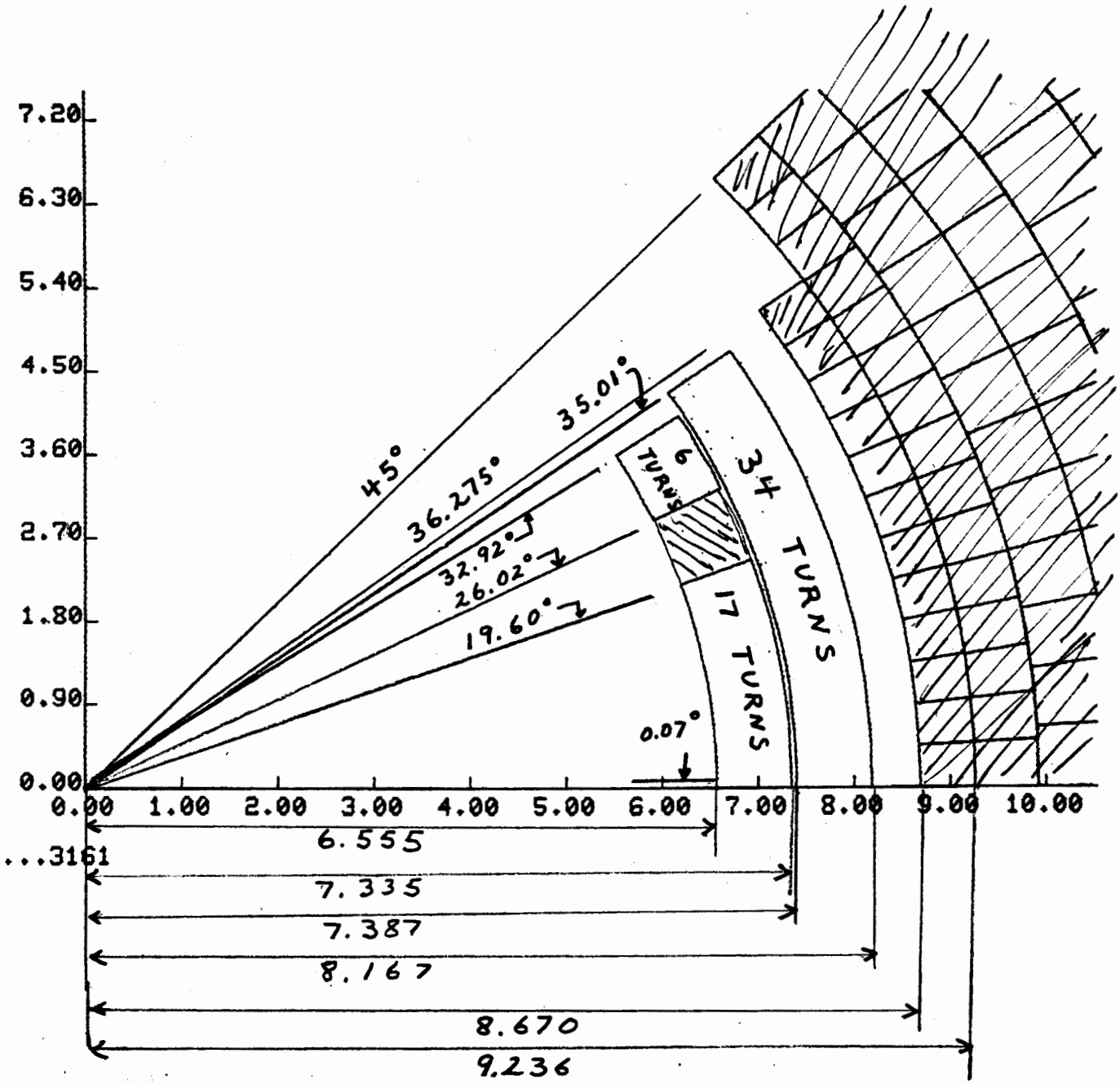
7.20
6.30
5.40
4.50
3.60
2.70
1.80
0.90
0.00
0.00 1.00 2.00 3.00 4.00 5.00 6.00 7.00 8.00 9.00 10.00
45°
35.01°
36.275°
32.92°
26.02°
19.60°
0.07°
6 TURNS
34 TURNS
17 TURNS
6.555
...3161
7.335
7.387
8.167
8.670
9.236

Bldg. 911
AD Library
D. Lazarus
D. Lowenstein
P. Hughes (1) plus
one for each author(s) file
J.R. Sanford
D.H. White
E. Jablonski
H. Foelsche
H.J. Halama
R. Thern

Bldg. 130
G. Bozoki

Bldg. 460
N.P. Samios

Bldg. 902
M.Q. Barton
H. Hahn
R.I. Louttit
R.B. Palmer
E.P. Rohrer
J. Spiro
R.P. Shutt
P. Tuttle
P. Reardon

Bldg. 725
L. Blumberg for
NSLS Library

Bldg. 510
H. Gordon
T.F. Kycia
L. Leipuner
S. Lindenbaum
S. Ozaki
S. Protopopescu
M. Sakitt
T.L. Trueman
R.R. Rau
M. Tannenbaum

W.R. Casey, 535A
D.G. Dimmler, 53

Distribution: Magnet Division
Scientific and Professional Personnel

/vk