Accelerator Department
BROOKHAVEN NATIONAL LABORATORY
Associated Universities, Inc.
Upton, New York 11973

ISABELLE Project

Technical Note No. 383

MAGNETIC FIELDS AND LORENTZ FORCES AT COIL ENDS OF THE CBA* DIPOLE-MAGNETS

H. Brechna, R. Fernow, J. Kaugerts

August 1, 1982

I. INTRODUCTION

This paper contains a detailed analysis of the peak magnetic fields and end forces in the dipole magnets. Specifically we address the question of the consequences of eliminating the stainless steel endblocks and enclosing the dipole ends in iron.

We have compared the results of all magnetic field programs available at BNL for maximum field value at conductor end sections and maximum fields in the straight sections.

We present data on forces acting at the coil ends with and without iron shielding. All force components acting at the centroids of the current blocks are given in tables. These forces enable the computation of stresses at the conductor and the motion of individual turns provided that the mechanical properties of the cable and the boundary conditions such as prestraining during winding, compression forces, supports, etc. are known.

II. PROCEDURE

The computational treatment of coil ends requires the use of the three-dimensional programs. The only computer program dealing with 3D-coil and iron configurations available at BNL is GFUN.[1] In the two versions of this program 116 and 400 iron elements can be treated. The new Rutherford version of GFUN was not available to us. A more sophisticated and hopefully faster program is Tosca[2] which is based on the solution of quasi-Poisson differential equations as opposed to GFUN which uses integral techniques. 3D-GFUN is used rarely at BNL simply because a number of magnet designers believe that it lacks accuracy and multipole results obtained with this program have contained gross errors.

*CBA: Colliding Beam Accelerator

The three-dimensional field calculation for the dipole with no iron return yoke is performed using MAG3. In this program the actual current distribution in each layer is approximated by a current sheet located at the mean cylindrical radius. The calculations include contributions from the straight portion of the current blocks extending 50 cm inward from the location of the end of iron in the actual magnet. Each of the seven distinct blocks of the end turns was treated separately. Each endblock was further divided into equally spaced segments according to the angle ϕ (Fig. 10,11). In certain cases the blocks were further subdivided according to the angle θ.

Once the subblocks were defined, value of Idl were assigned, scaled appropriately by the size of the subblock. The entire value of the current is assumed to be concentrated at the center of the subblock. The total field at some observation point is then calculated by summing the contribution of each subblock. If the observation point is located inside an actual current block the program subdivides that block into smaller blocks and repeats the calculation excluding the smaller block that contains the observation point.

Early computational work on coil ends was performed with no iron whatsoever.[3,4,5] It was found that the field enhancement at the conductor was considerably higher than the value on the axis in the center portion of the magnet.

One may expect a reduction of the field enhancement at the ends due to iron saturation effects. The true field enhancement was uncertain, but was expected to be substantial. Since the highest field in the superconductor determines the critical current, the operational transport currents might have to be unacceptably lower. Thus it was decided not to extend the iron flux return over the end regions.

Unacceptable crosstalk in the iron-free ends of the "2 in 1" magnets have made it imperative to extend the low carbon steel laminations over the entire coil length including the coil-end-portions. This being the case it was natural to reexamine the question of whether it is necessary to place the ends of the "1 in 1" magnets in stainless steel (Fig. 1). It is obvious that significant cost reduction could be achieved if the machined stainless steel blocks could be largely replaced with ordinary iron laminations.

In order to build confidence in the 3D-GFUN program we adopted the following computational procedures:

A. Comparison of two-dimensional MDP-calculations (with 80 iron elements and 105 conductor elements) with the well established Poisson program at various field levels[9] and with experimental data obtained from the LM6-dipole.

B. Comparison of three-dimensional computations with no iron from GFUN (eliminating the iron) and independent solutions using the program MAG3.

C. Comparison of two-dimensional iron calculations with three-dimensional iron calculations well inside straight section of the dipole.

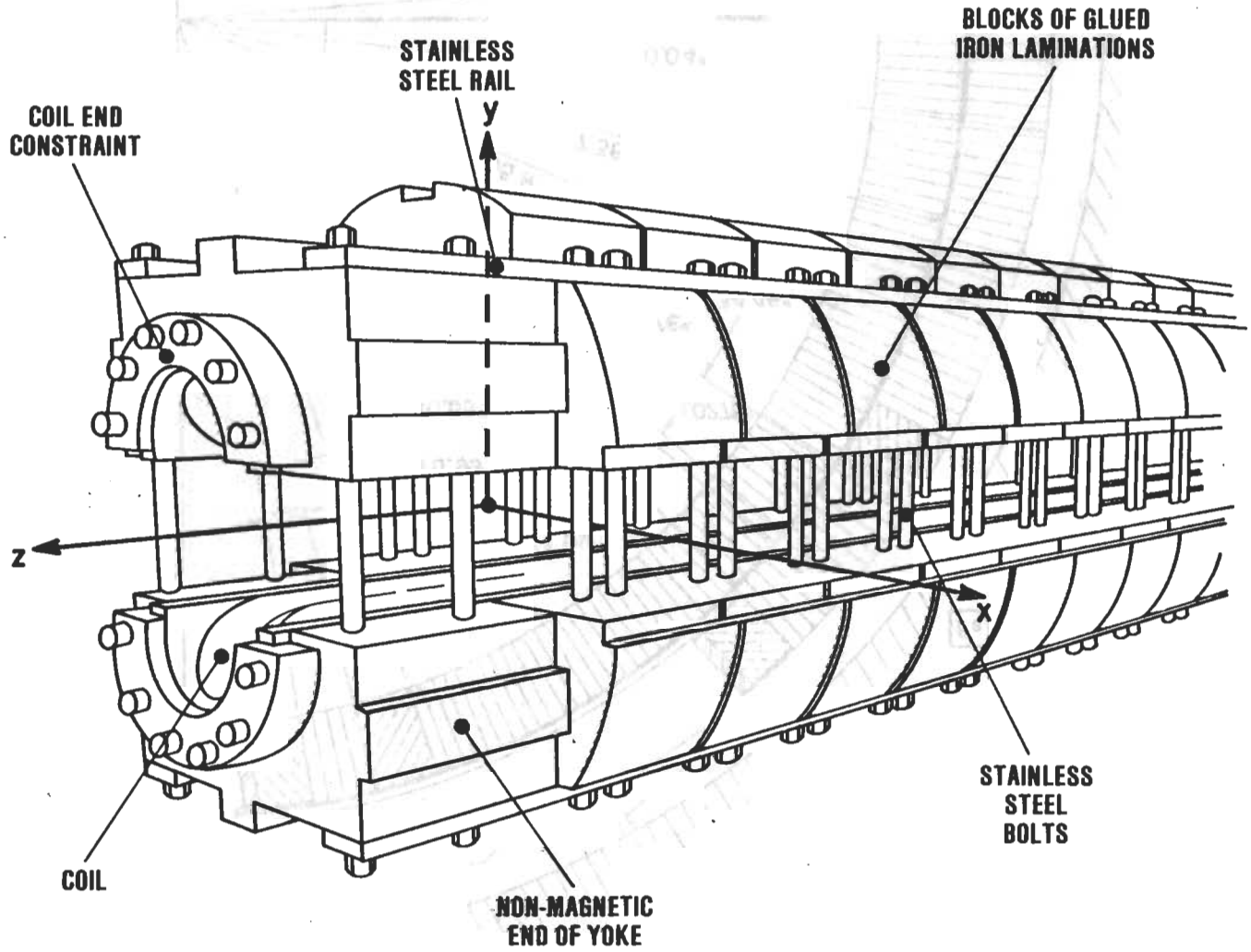

Figure 1: The CBA Dipole. The present "1 in 1" iron yoke design uses nonmagnetic ends. The purpose of this solution is to eliminate any field enhancement which is produced by coil ends.

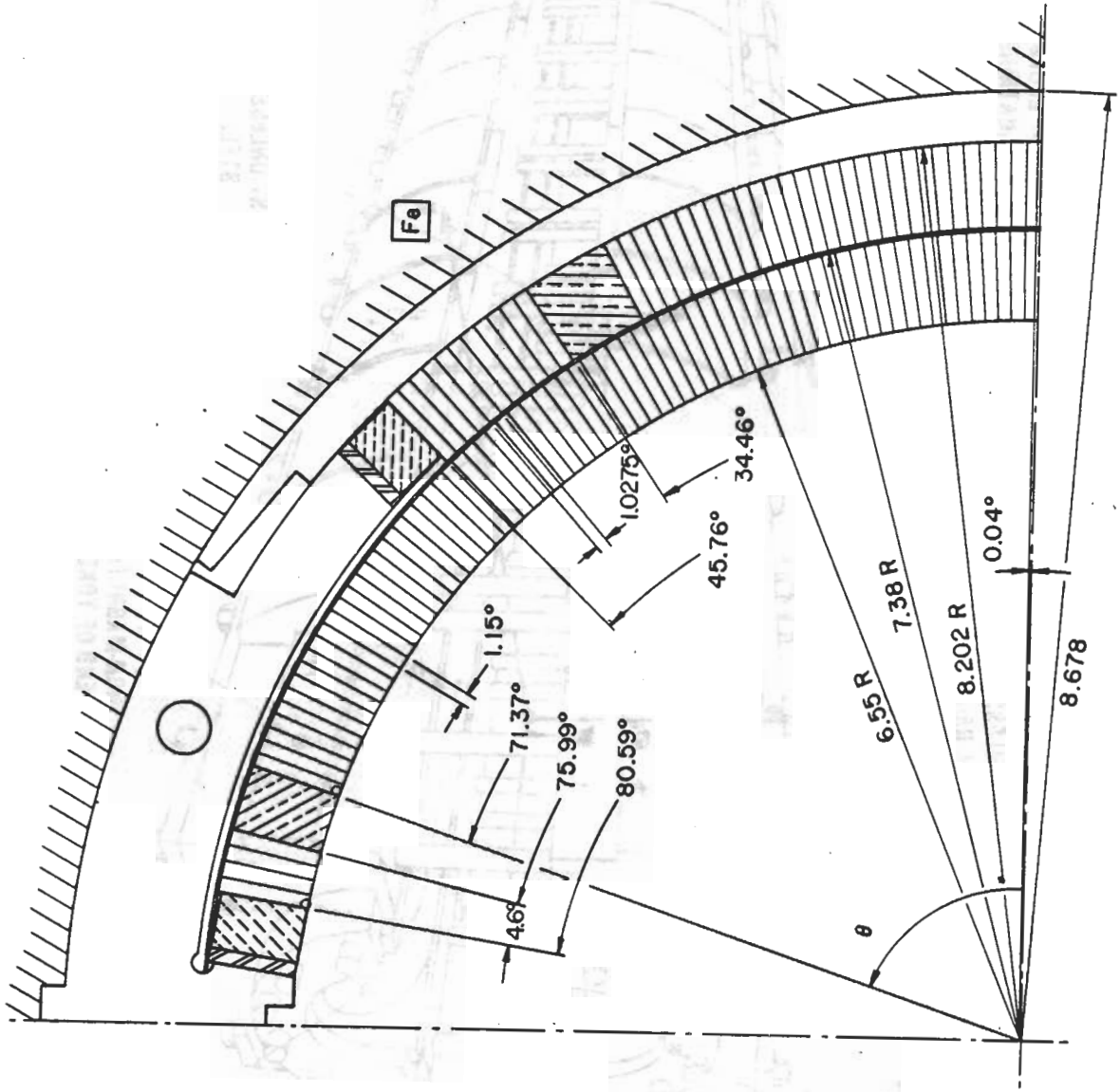

Figure 2: Cross section of the CBA dipole coil. The two layer coil consists of 66 turns per pole in the inner layer and 39 turns in the outer layer. The inner layer is subdivided into four blocks with 4, 20, 21 and 21 turns while the outer layer consists of three blocks with 11, 18 and 10 turns. All dimensions given are in cm. The cable angular width indicated is the value under compression.

III. RESULTS

A. No Iron - Two-Dimensional Field Computation

The points with highest absolute field value are at

$x = 1.1$ cm ; $y = 6.65$ cm with $|\hat{B}_1| = 4.35$ T at 4000 A and

$x = 2.15$ cm ; $y = 6.35$ cm with $|\hat{B}_2| = 4.2$ T at 4000 A,

the central field is $|B| = 3.67$ T (Fig. 2). The field change for the two-dimensional field is

$$(|\hat{B}_1|-B(0,0))/B(0,0) = 0.185 \quad \text{and} \quad (|\hat{B}_2|-B(0,0))/B(0,0) = 0.144 \text{ (Fig. 3a, b).}$$

Field enhancement 18.5%.

B. Two-Dimensional Field Computation With Iron

The points with the highest field value are at

$x = 1.1$ cm ; $y = 6.65$ with $|\hat{B}| = 6.07$ T at 4000A and

$x = 2.15$ cm ; $y = 6.35$ cm with $|\hat{B}| = 5.93$ T at 4000A.

the central field is $|B| = 5.5$ T. The field change the for two-dimensional case is

$$(|\hat{B}|-B(0,0)/B(0,0) = 0.105 \text{ and } (|\hat{B}| - B(0,0))/B(0.0) = 0.078 \text{ (Fig. 4a, b).}$$

Field enhancement 10.5%.

The peak fields occur at the inner part of coilblock No. 1 and coilblock No. 2 in the inner coil.* (Fig. 4a, b).

C. No Iron - Three-Dimensional Field Computation.

In order to determine the precise location of the peak-field within the current block we have examined a field grid around the approximate location determined in a preceeding run using 0.2 cm steps in Z, 1° steps in θ, and 0.1 cm steps in r.

The peak field occurs in the inner half of the inner coil. Longitudinally all the flux contours show a double peak structure. The first peak occurs around 0.5 cm from the start of the end section near the transition of the small block No. 1 around the post. The second peak appears near 3 cm from the start of the coil end near the beginning of the transition of the second block of inner turns around the post. The actual peak field occurs at $z = 34.72$ cm and $\theta = 80°$ (see Fig. 2), with $z = 0$ being 29.52 cm inward from the edge of the present iron lamination surface.

*The notation of coilblocks 1-7 is illustrated in Fig. 8, 9. Block 1 refers to the coilportion near the post with 4 turns, etc.

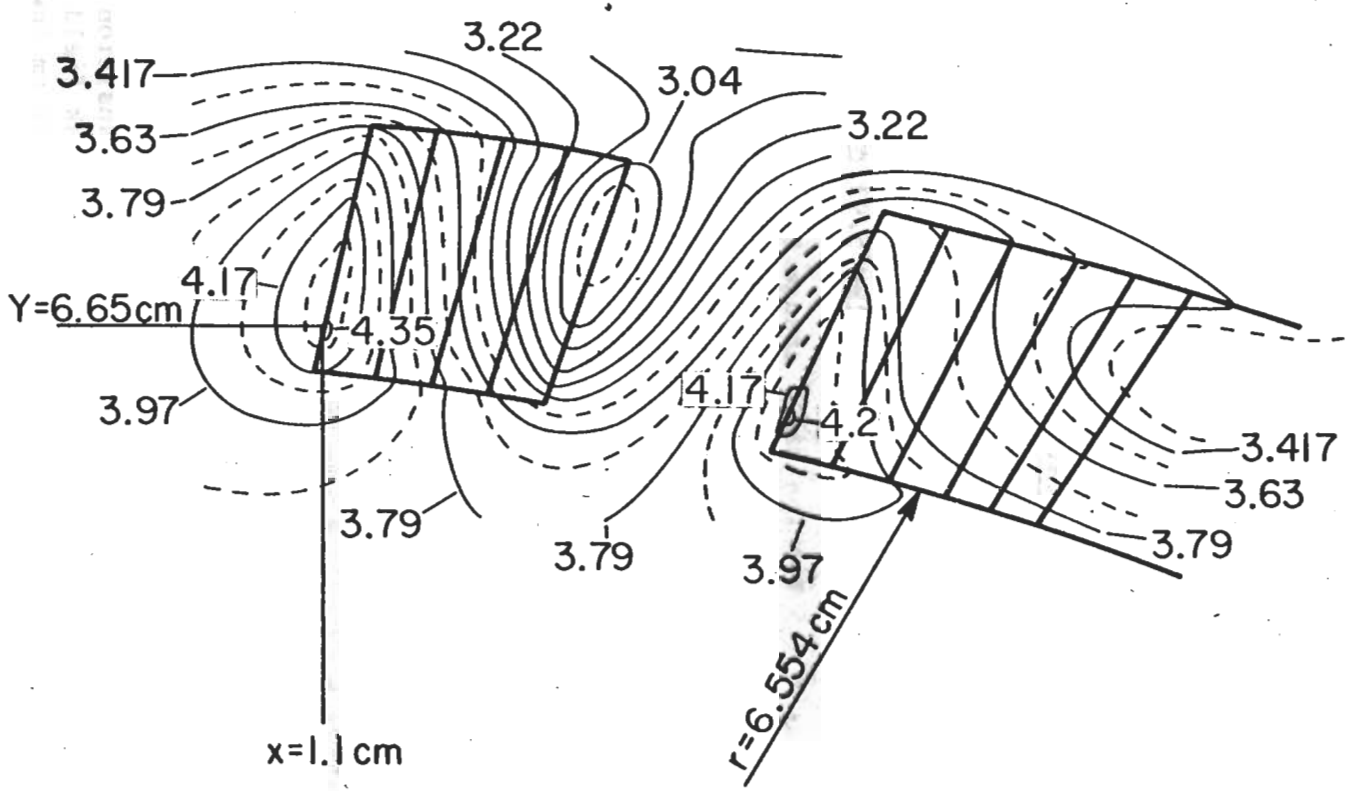

Figure 3a: Lines of constant |B|. The numbers given are field values in (T). The magnet current is 4000 A. At a central field of 3.67T the highest field value in the inner 4 turn block is 4.35T. The field calculation is performed with no iron yoke present.

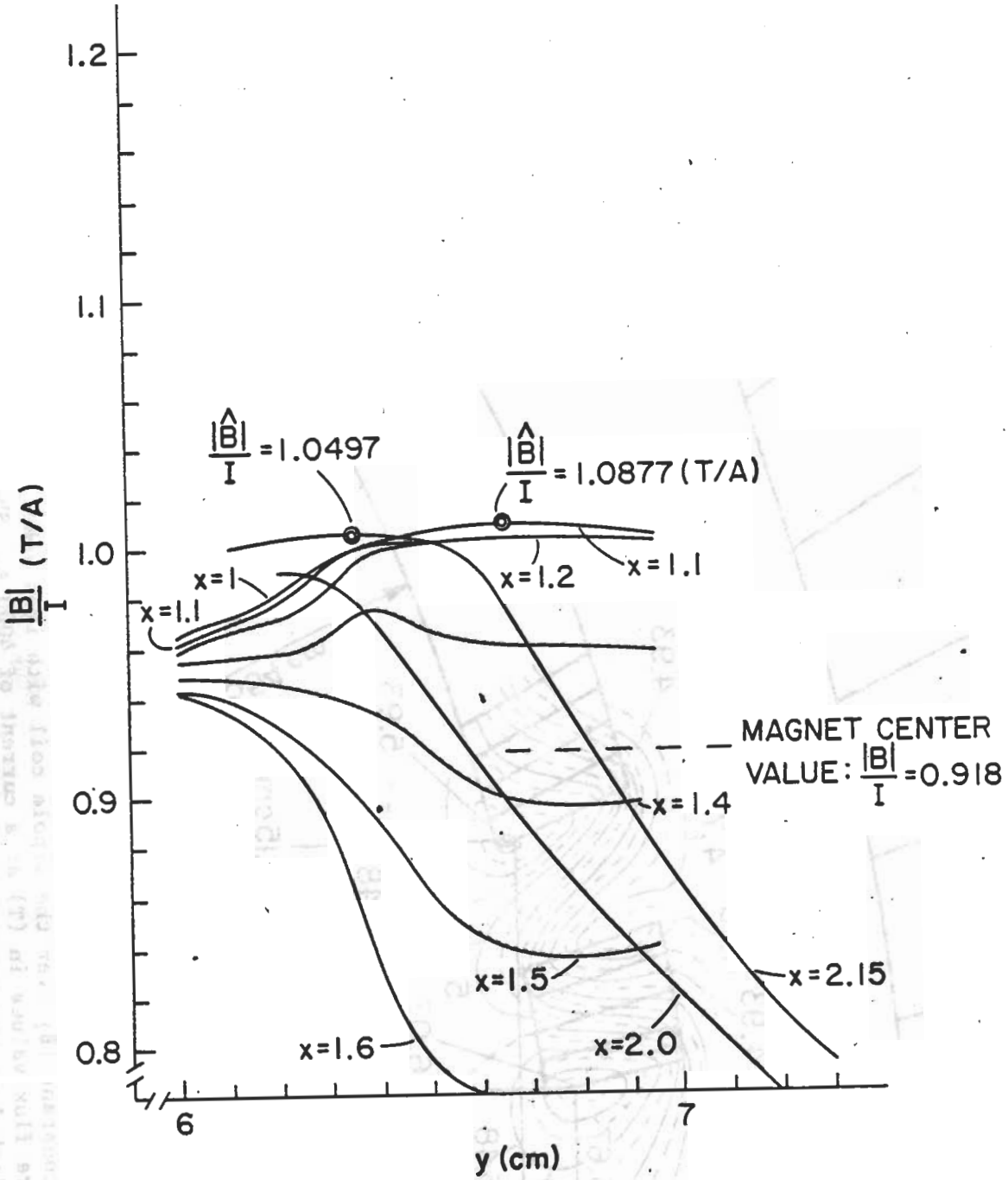

Figure 3b: Values of transfer function for constant x values for the CBA-Dipole without iron. The transfer value in the middle of the coil x=0, y=0 is 0.918. The highest value occurs at x=1.1 cm and y=6.65 cm with B/I=1.0877 T/A.

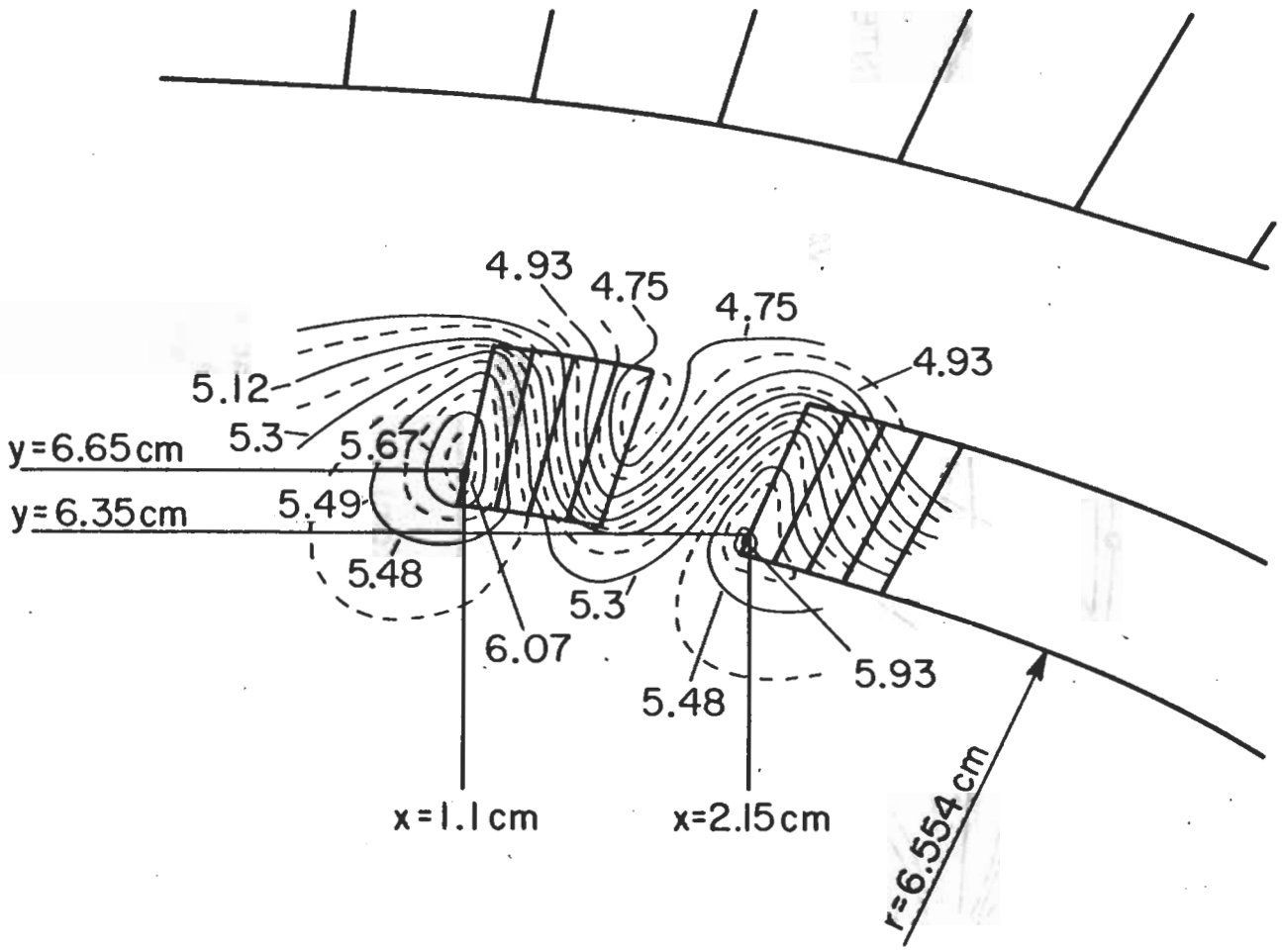

Figure 4a: Lines of constant |B| over the dipole coil with iron yoke. The numbers are flux values in (T) at a current of 4000 A. Shown are current block 1 at the post (4 turns), part of current block 2 and a few iron elements.

Figure 4b: Transfer function $|B|/I$ vs. y for constant values of x as parameter. The calculation is performed for an infinitely long dipole (two dimensional case) with iron yoke. The transfer value at the dipole center is 1.374 T/A, the highest transfer value is 1.518 T/A at x = 1.1 cm, y = 6.65 cm, which is found inside coil block 1.

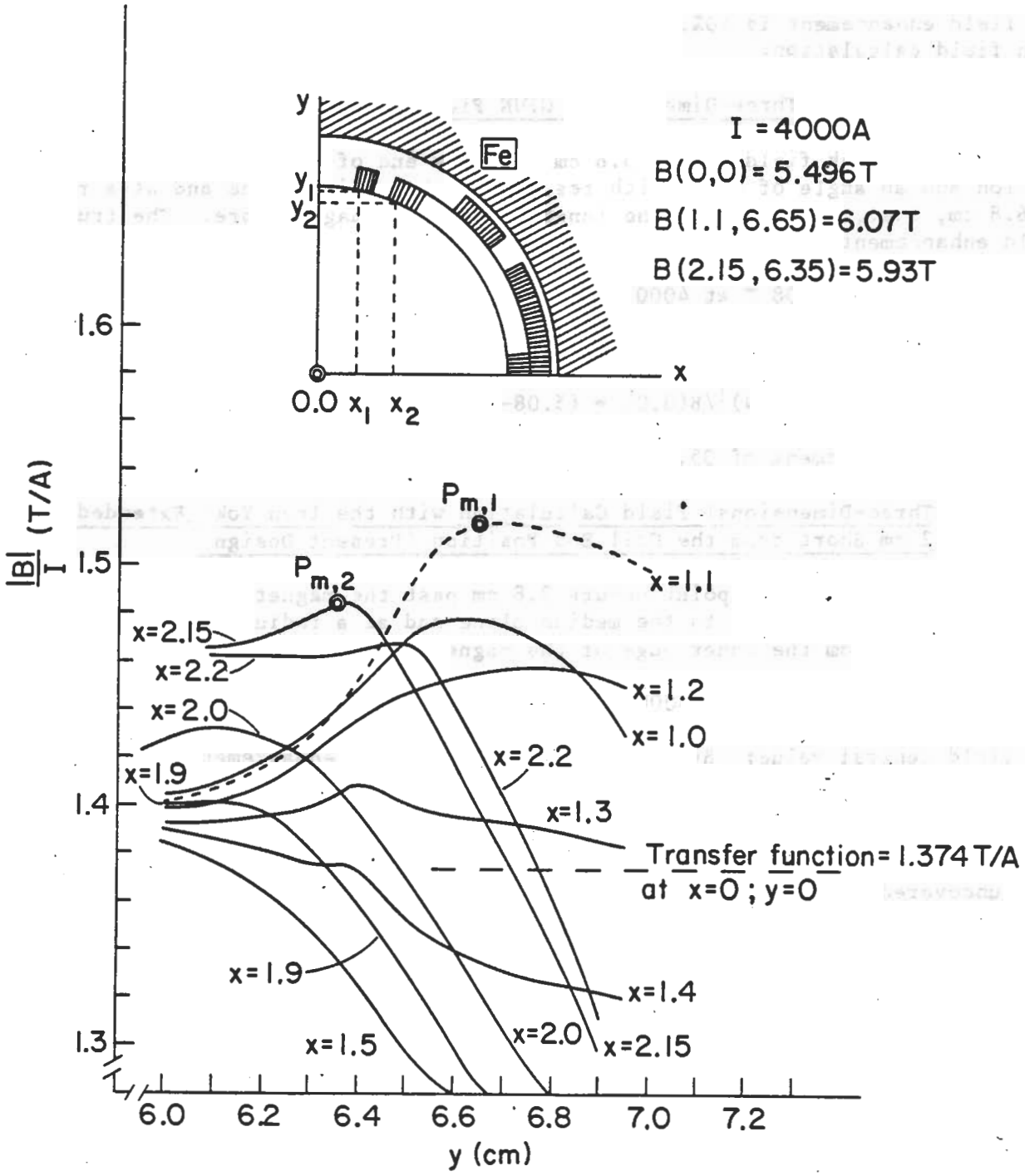

$$|\hat{B}_1| = 4.32 \text{ T at } 4000\text{A} \quad : z = 31.52 \text{ cm} \; ; \; \theta = 80^\circ$$

$$|\hat{B}_2| = 5.16 \text{ T at } 4000\text{A} \quad : z = 34.72 \text{ cm} \; ; \; \theta = 80^\circ$$

The field central value B(0,0) = 3.68T.

The field changes are:

$$(|\hat{B}_1| - B(0,0))/B(0,0) = (4.32-3.68)/3.68 = 0.174$$

$$(|\hat{B}_2| - B(0,0))/B(0,0) = (5.16-3.68)/3.68 = 0.40$$

The field enhancement is 40%. Figure 5 illustrates the results of the 3D-no iron field calculation.

D. <u>No Iron - Three-Dimensional GFUN Field Calculation.</u>

The peak field occurs 3.8 cm past the end of the magnet straight section and an angle of 87.5° with respect to the median plane and at a radius of 6.8 cm, i.e., 0.25 cm from the inner edge of the magnet bore. The true field enhancement is

$$|\hat{B}| = 5.08 \text{ T at } 4000 \text{ A} \qquad z = 33.32 \text{ cm} \qquad \theta = 87.5^\circ$$

The central value: B(0,0) = 3.739 T. The field change is:

$$(|\hat{B}|-B(0,0))/B(0,0) = (5.08-3.739)/3.739 = 0.358$$

or a field enhancement of 35.8%.

E. <u>Three-Dimensional Field Calculation with the Iron Yoke Extended 2 cm Short from the Coil End Position (Present Design).</u>

The high field point occurs 3.8 cm past the magnet end-section at θ = 87.5° with respect to the median plane and at a radius of 6.8 cm, i.e., 0.25 cm from the inner edge of the magnet above.

$$|\hat{B}_1| = 5.45 \text{ T at } 4000 \text{ A} \qquad z = 33.35 \text{ cm} \qquad \theta = 87.5^\circ$$

The field central value: B(0,0) = 5.48 T. The field enhancement:

$$(|\hat{B}|-B(0,0))/B(0,0) = -0.0055$$

Figure 6 illustrates the results of the 3D field calculation with the coil ends uncovered.

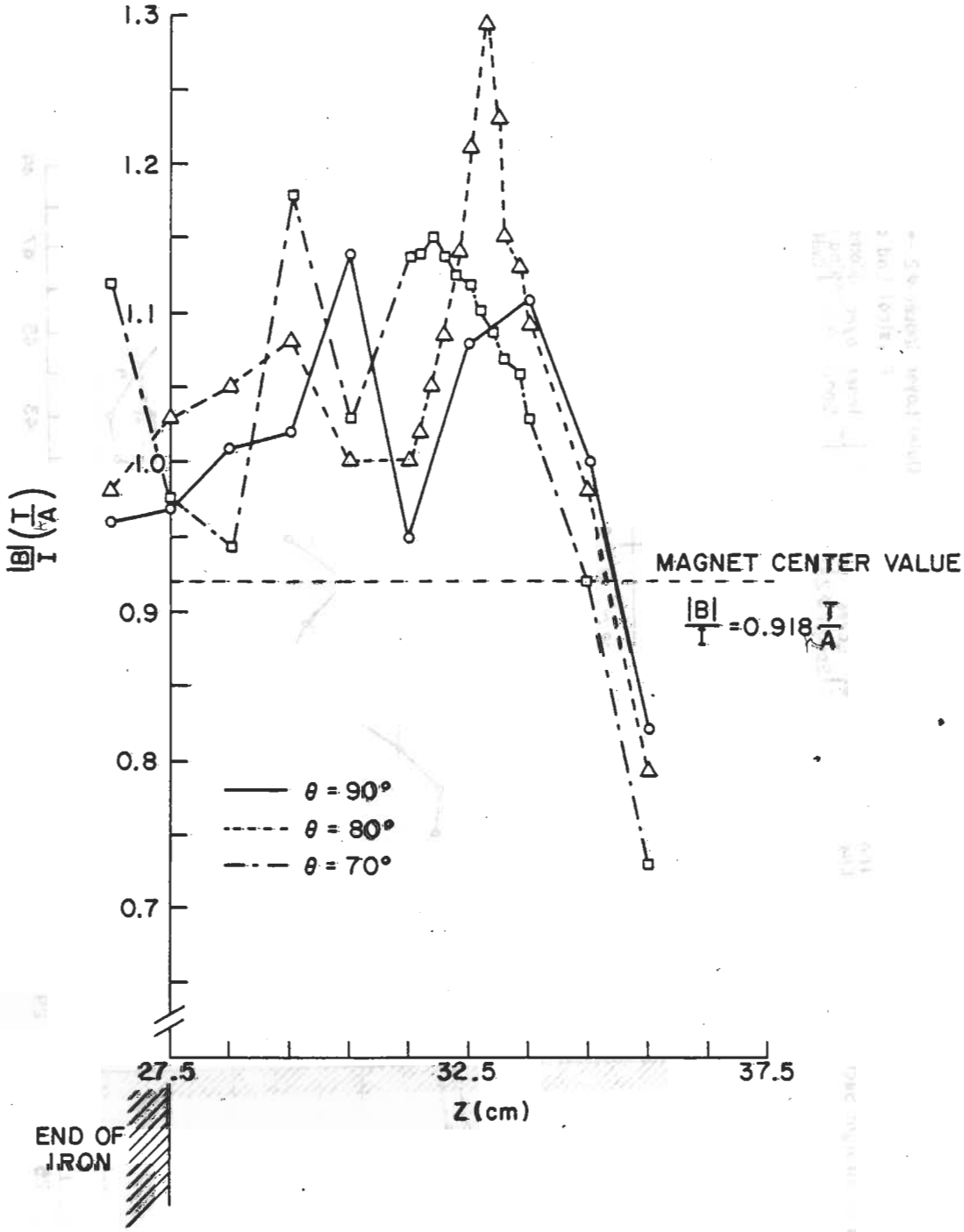

Figure 5: Variation of $|B|/I$ versus longitudinal distance z. The three dimensional field calculation is performed with MAG3. (NO IRON).

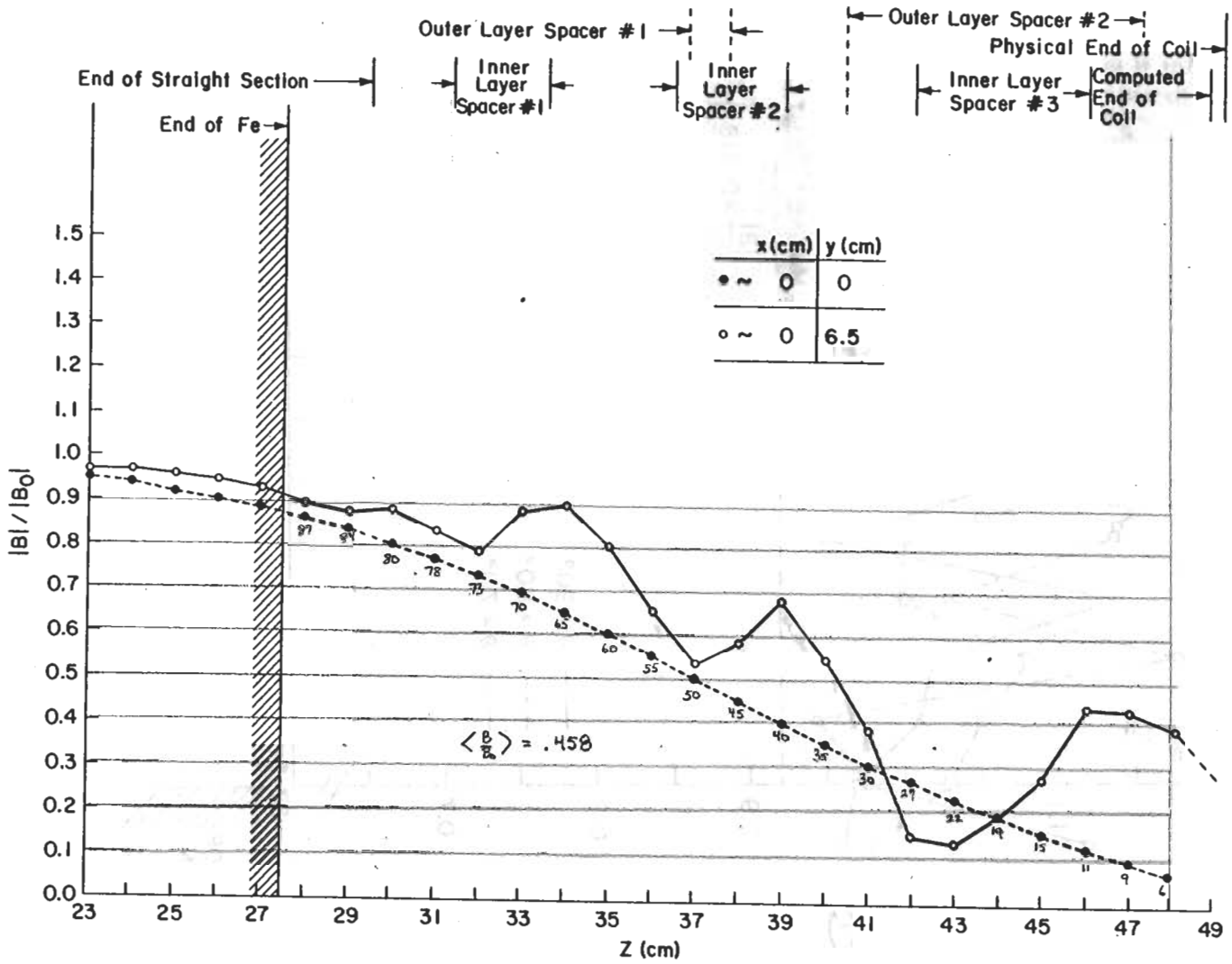

21 pts

Figure 6: Normalized induction $|B|/B(0,0,0)$ versus longitudinal distance. The coil straight section extends 2 cm beyond the iron lamination. (Present design).

F. Three-Dimensional Field Calculation with the Iron Yoke Extended over the Entire Coil.

The location of the high field point

$$|\hat{B}| = 6.64 \text{ T at } 4000 \text{ A} \qquad z = 33.35 \text{ cm} \quad \theta = 87.5^\circ$$

The field center value: $B(0,0) = 5.63$ T. Field enhancement

$$\left(|\hat{B}| - B(0,0)\right)/B(0,0) = 0.18$$

Figure 7 illustrates the results of the 3D field calculation with the iron lamination extended over the entire coil length.

IV. REVIEW OF THE ABOVE COMPUTATIONS

The central field values for the no iron computations are not identical (two-dimensional GFUN, 3.6 T (A); three-dimensional Current Sheet calculation 3.68T (C), GFUN, three-dimensional calculation 3.739T (D). We also note variations of the central field values if iron yokes have been incorporated (two-dimensional GFUN, 5.5T (B); three-dimensional GFUN, 5.48T (E) and 5.63T (F) respectively.) The variations are within 3.8% (air yoke) and 2.3% (iron yoke) and are probably due to the following reasons:

i) The overall current densities in the coils for the air yoke calculations vary by 3%. They have not been adjusted to each other.

ii) The number of iterations in the two-dimensional case were 40, and 80 iron elements were incorporated. In the three-dimensional case only 96 iron elements were incorporated resulting in a coarser mesh compared to 2D-calculations. In addition, the two-dimensional calculation assumes an infinitely long uniform yoke, while in the three-dimensional case we assumed the half length of the straight section to be 29.52 cm or about twice the average coil diameter. To check the data for the three-dimensional GFUN, the computation was repeated with 256 iron elements. The length of the iron was subdivided into 4 cm long elements and the radial yoke dimension was divided into 2 sections resulting in 6 cm long pieces. The computational result differed only by 0.7%.

iii) Iron boundaries, tolerances, and relative positions of coils and iron will yield variations of the order of 1%.

It is felt, however, that the results we have obtained are fairly accurate and one may use the three-dimensional computational results for fields and forces with confidence.

In order to pinpoint the high field value, the field was calculated in 0.05 cm space increments, using GFUN. The high field region occurs as a sharp peak extending over a region of 2 mm. Thus if the 18% field enhancement over the central field value or the 7.5% field enhancement over the peak field in the two-dimensional case is not acceptable a shim of nonmagnetic steel, or G10 plates can be placed between the iron laminations. G10 has a very high

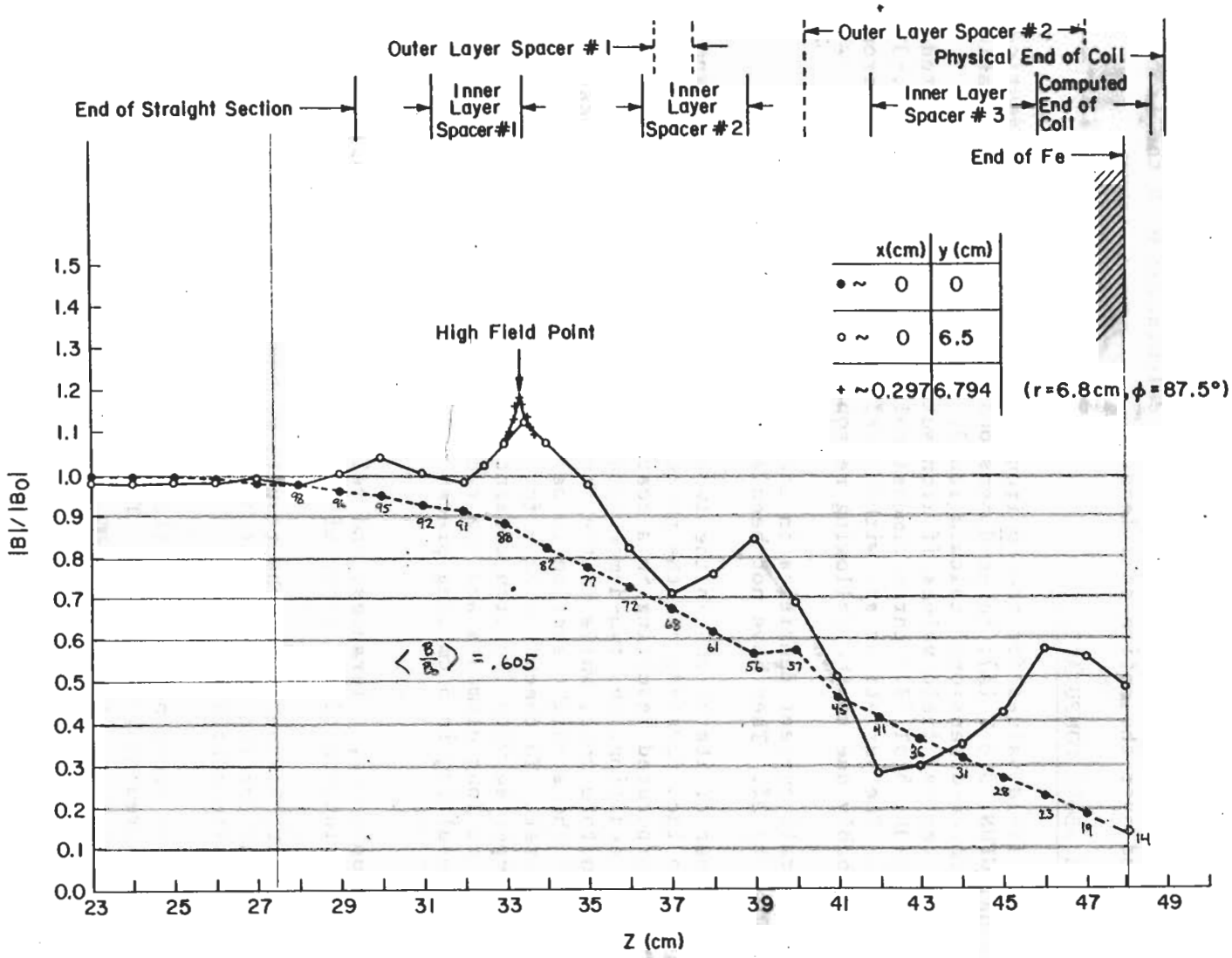

21 pts

Figure 7: Normalized induction $|B|/B(0,0,0)$ versus longitudinal distance z. The iron lamination extends over the entire coil end.

compression value of 100 kpsi (710 MPa) and can be as readily punched as the low carbon laminations.

The most important finding is, however, the following: the field enhancement over the central field value is not the 40% indicated by the air yoke calculation, but less than 20% and less than 10% over the high field value in the two-dimensional case, which is well confirmed by experiments.[6] An experiment by W. Sampson indicates that the effective length of the dipole magnet is enhanced over the present magnet design by 2% if the iron lamination is extended over the entire length of coil. This would mean that the operational field can be reduced accordingly without changing the capability of the CBA. In addition the dipole maximum current carrying capability is approximately proportional to the square root of the peak field at the conductor. We conclude that extending the iron over the entire coil length and eliminating the stainless steel constraints will result in a 2.5% reduction of the current required for the dipole. Since the present dipoles operate 16% above the design value of 5 T, it thus appears possible to make a significant cost reduction by eliminating the stainless steel ends and still exceed the design field by ∿13%.

V. THE MATHEMATICAL MODEL OF THE COIL ENDS

The coil ends are illustrated in Fig. 8 and 9. The z-extensions are obtained from measurements by A. Greene[8] for the butt ends. The parametric equations of the ends in Cartesian coordinates are given by

$$x_\phi = R.\ \cos\left(90° - (90° - \theta_o).\ \sin\phi\right)$$

$$y_\phi = R.\ \sin\left(90° - (90° - \theta_o).\ \sin\phi\right) \qquad (1)$$

$$z_\phi = R.\ (\pi/2 - \pi/180\ .\ \theta_o).\ \cos\phi$$

R is the radius to the cylinder of the centroid of a turn, and θ_o is the angle from the median plane to the beginning of the arc for individual coil blocks (Fig. 10), or for each turn for more accurate calculation. The parameter $\phi = 0°$ at the post and 90° at the end of the straight conductor. We have divided each layer in several blocks (inner layer 4 blocks, outer layer 3 blocks), and show the projection of the centroid in Fig. 11. To calculate forces each block is represented by a current filament located at the centroid of that block. The Ampère-turns of each block is acting in the current filament. This simplification in the calculation allows easier computation of forces in the conductor with little loss in accuracy. The forces may be used to obtain the stress values in the materials used in the conductor and the insulation and to determine the limits of prestraining.

END SECTION
INNER LAYER, BUTT END

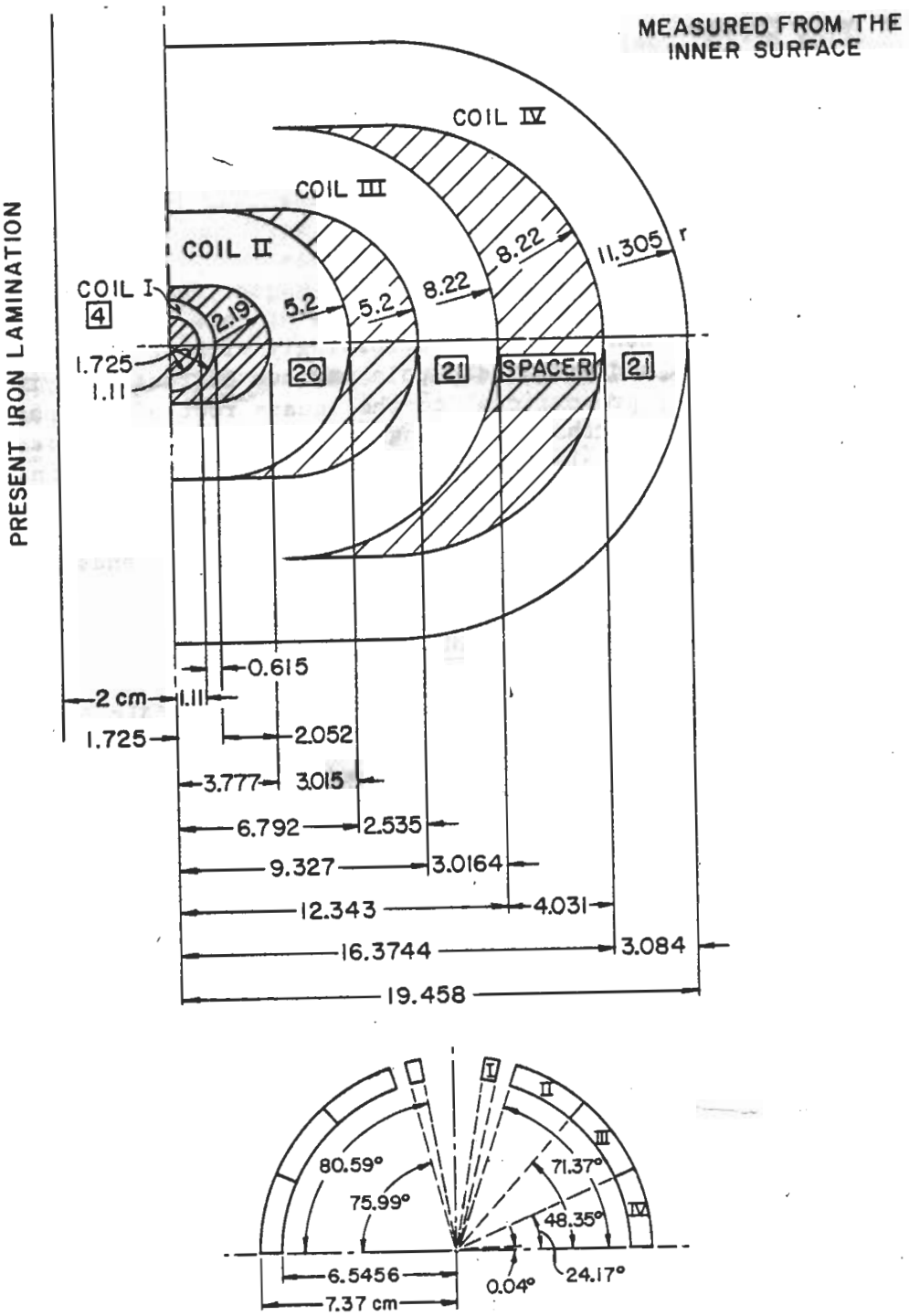

Figure 8: Coil end of the inner layer. The iron lamination of the present dipole is terminated 2 cm from the coil end. The coil dimensions used in the calculations take into account the compression and prestraining.

END SECTION
OUTER LAYER

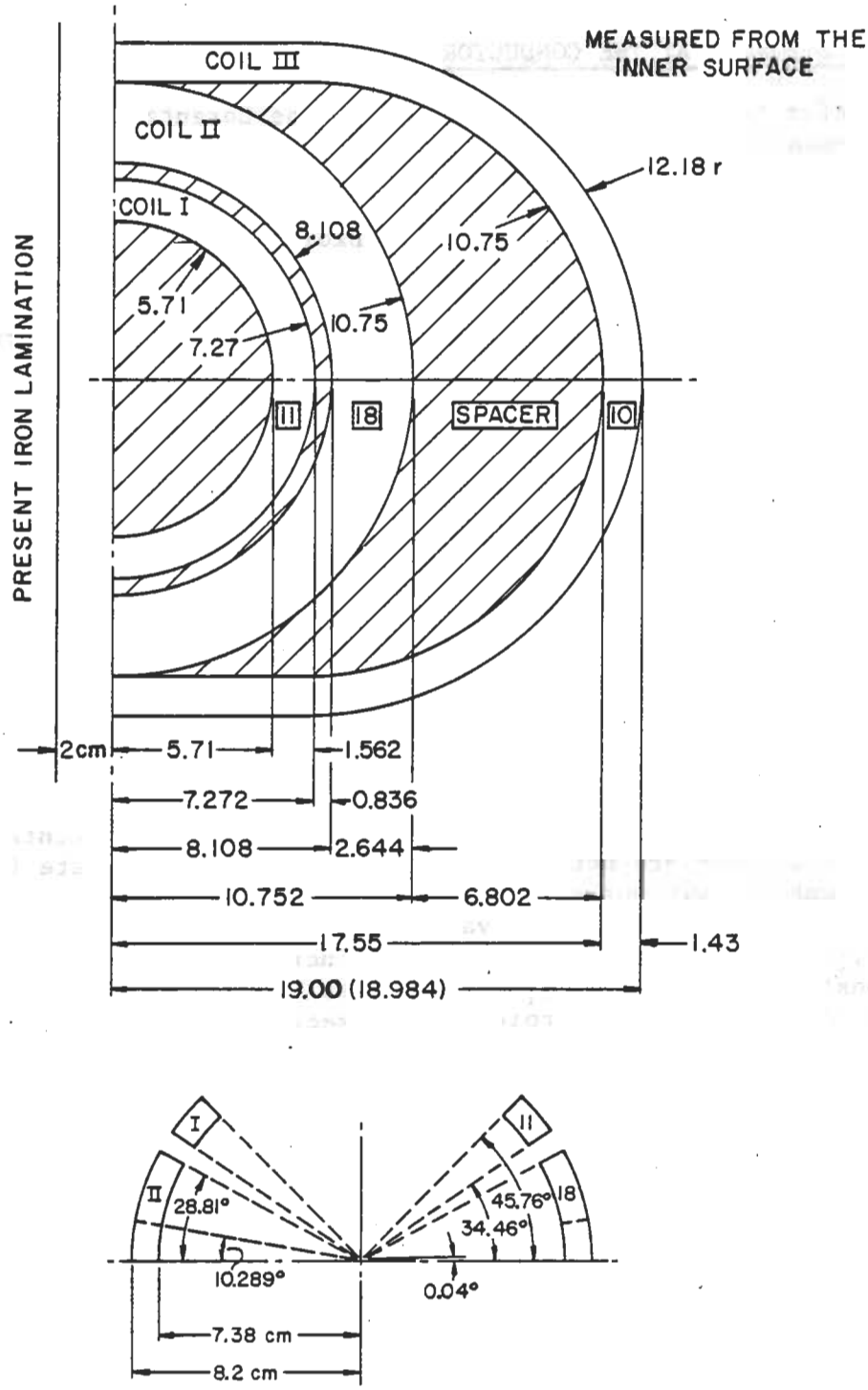

Figure 9: Coil end of the outer layer. The butt-end in compressed condition is illustrated.

VI. LORENTZ FORCES AT THE CONDUCTOR

We refer to the two Figs. 10 and 11. The Lorentz force acting on a current element is determined by

$$\vec{F} = w.I \int \vec{B} x d\vec{l} \qquad (2)$$

with w the number of turns in each block and I the transport current. The force components acting on the filament from ϕ_i to ϕ_{i+1} are obtained simply from

$$F_x = wI \int_{\phi_i}^{\phi_{i+1}} (dy\ B_z - dz\ B_y)$$

$$F_y = wI \int_{\phi_i}^{\phi_{i+1}} (dz\ B_x - dx\ B_z) \qquad (3)$$

$$F_z = wI \int_{\phi_i}^{\phi_{i+1}} (dx\ B_y - dy\ B_x).$$

If we assume that B_x, B_y, B_z are constant over the coil increments $(\phi_{i+1}-\phi_i)$, which of course they are not rigorously, then we can integrate (3). To obtain realistic numbers, without substantial effort we assumed that the average force (obtained from the two end values acting on the ends of the filament at ϕ_i and ϕ_{i+1}) acts on the centroid of each increment. This means that B_x, B_y, B_z are constant from ϕ_i to ϕ_{i+1} and equal to the average value of the two endvalues and act on the centroid of this section. With this assumption (3) is written

$$F_x = wI \{ \bar{B}_z (y\phi_{i+1} - y\phi_i) - \bar{B}_y (z\phi_{i+1} - z\phi_i) \}$$

$$F_y = wI \{ \bar{B}_x (z\phi_{i+1} - z\phi_i) - \bar{B}_z (x\phi_{i+1} - x\phi_i) \} \qquad (4)$$

$$F_z = wI \{ \bar{B}y (x\phi_{i+1} - x\phi_i) - \bar{B}_x (y\phi_{i+1} - y\phi_i) \}$$

where $y\phi_{i+1}$ is the value of y corresponding to the parameter ϕ_{i+1} etc.. We have calculated in Tables 1A through 7D the dimensions of each current element, the appropriate $\bar{\phi}$ value, and the force components using 3D-G Fun.

We have also given the radial and tangential force components which are obtained from

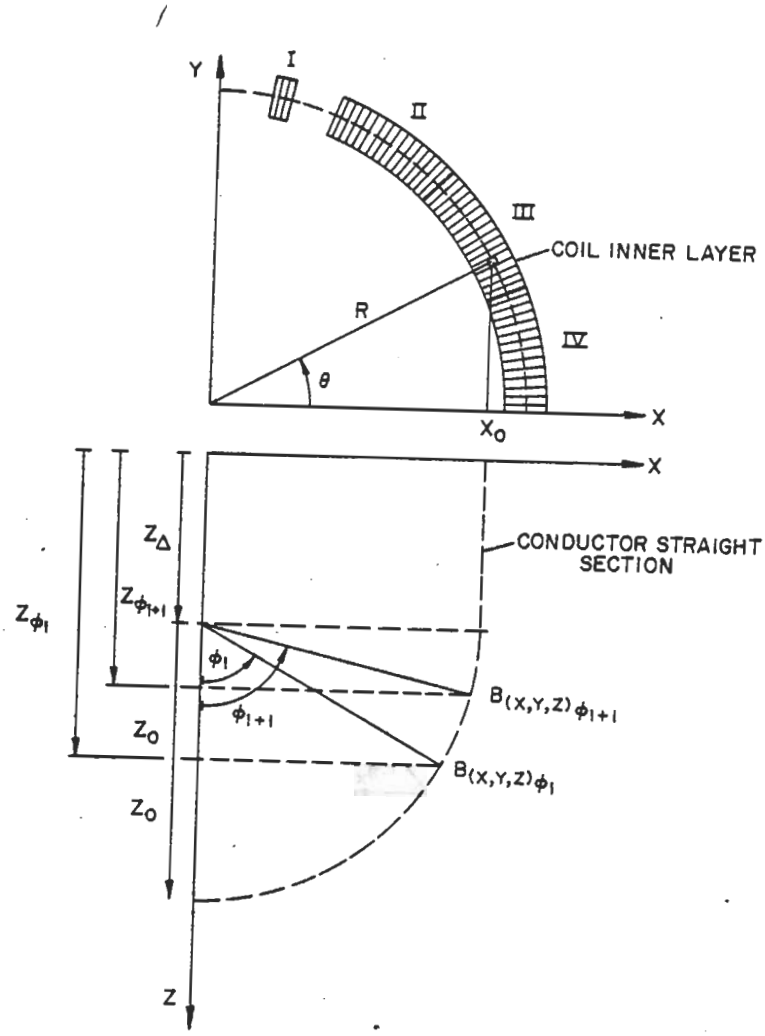

Figure 10: The model used to determine forces in end sections. Each current block is represented by a current filament located at the centroid carrying (I.w.) ampere-turns. ϕ in the parametric angle from z to x. θ determines the block position in the x-y plane.

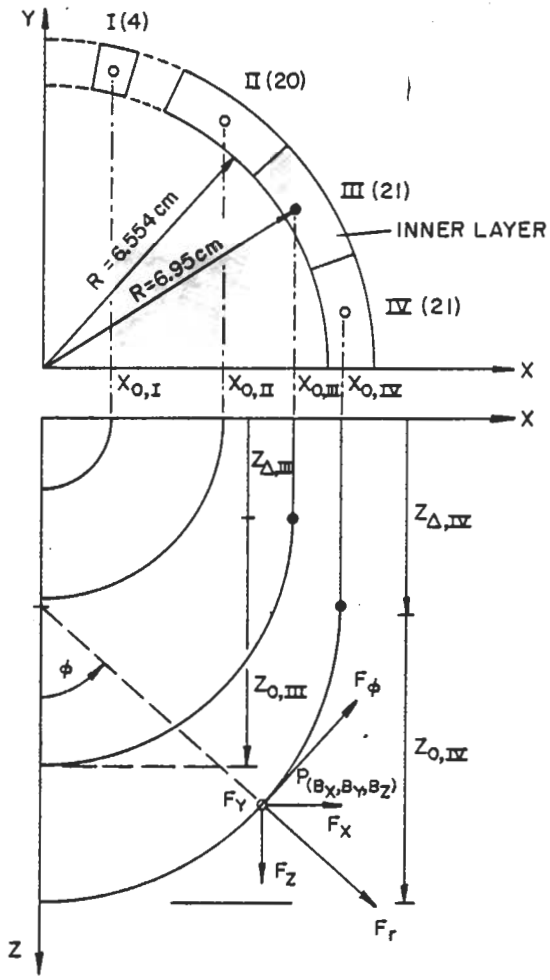

Figure 11: Coil end of the inner layer is represented by four current filaments. Illustrated are at a point P of the filament (IV) the force components F_x,F_y and F_z as well as the radial F_r and tangential force F_ϕ.

$$F_r(\phi_i) = \cos\left(90°-(90°-\theta_o) \cdot \sin\phi_i\right) \cdot F_{x,i} + \sin\left(90°-(90°-\theta_o) \cdot \sin\phi_i\right) \cdot F_{y,i} \tag{5}$$

$$F_\phi(\phi_i) = \cos\phi_i \cdot \sin\left(90°-(90°-\theta_o) \cdot \sin\phi_i\right) \cdot F_{x,i} - \cos\phi_i \cdot \cos\left(90°-(90°-\theta_o)\right) \cdot \sin\phi_i\right) \cdot F_{y,i} - \sin\phi_i \cdot F_{z,i}$$

For $\phi_i = 0°$ (at the post):

$$F_\phi(0°) = F_{x,0}$$

$$F_r(0°) = F_{y,0}$$

$\phi_i = 90°$ (straight section):

$$F_\phi(90°) = F_z(90°)$$

$$F_r(90°) = F_x(90°) \cdot \cos\theta_o + F_y(90°) \cdot \sin\theta_o$$

The force components are also illustrated in Figs. 12 to 27.

As an example we determine the total force in z direction acting on both ends of the two coil halves:

(1) No iron: Tables 1B through 7B:

$$F_z = 8 \sum_i F_i(z) = 8\text{x}16{,}782 = 134{,}258 \text{ (N)}$$

or approximately 30,000 lbs.

(2) Coil ends with the iron yoke extended over the entire coil, Tables 1C through 7C:

$$F_z = 8 \sum_i F_i(z) = 8\text{x}35{,}622 = 284{,}976 \text{ (N)}$$

or approximately 62,695 lbs.

(3) Coil ends extend up to 2 cm from the bended coil ends, Tables 1D through 7D:

$$F_z = 8\sum_i F_i(z) = 8\text{x}17{,}230 = 137{,}840 \text{ (N)}$$

or approximately 30,325 lbs. This case represents the present CBA-Dipole design shown in Fig. 1. It is interesting to note that block No. 4 has a strong inward acting F_z value, which makes its support somewhat more difficult.

TABLE 1A DIMENSIONS FOR CURRENT BLOCK #1
(INNER COIL COUNTED FROM THE POST)
NUMBER OF TURNS= 4
MEDIAN RADIUS= 1.417 CM

X (CM)	Y (CM)	Z (CM)	PHI (DEG)	LARC (CM)
0.001	6.950	32.937		
0.400	6.938	32.879	8.221	0.405
0.800	6.904	32.690	25.382	0.444
1.000	6.878	32.524	39.624	0.260
1.200	6.846	32.274	51.372	0.321
1.400	6.808	31.739	69.483	0.575
1.417	6.804	31.520	85.555	0.220

.203

17.16

TABLE 2A DIMENSIONS FOR CURRENT BLOCK #2
(INNER COIL COUNTED FROM THE POST)
NUMBER OF TURNS=20
MEDIAN RADIUS= 5.284 CM

X (CM)	Y (CM)	Z (CM)	PHI (DEG)	LARC (CM)
0.001	6.950	36.804		
0.200	6.947	36.795	1.091	0.199
0.400	6.938	36.769	3.265	0.202
0.600	6.942	36.725	5.467	0.205
0.800	6.904	36.662	7.709	0.209
1.000	6.878	36.581	10.010	0.215
1.300	6.827	36.421	13.016	0.339
1.600	6.763	36.212	16.843	0.366
1.900	6.685	35.947	21.029	0.406
2.200	6.593	35.614	25.740	0.463
2.500	6.485	35.196	31.236	0.550
2.800	6.361	34.658	37.981	0.694
3.100	6.220	33.921	46.992	0.968
3.300	6.117	33.197	57.651	0.998
3.480	6.016	31.520	76.531	2.484

TABLE 3A DIMENSIONS FOR CURRENT BLOCK #3
(INNER COIL COUNTED FROM THE POST)
NUMBER OF TURNS=21
MEDIAN RADIUS= 6.710 CM

X (CM)	Y (CM)	Z (CM)	PHI (DEG)	LARC (CM)
0.001	6.950	42.357		
0.300	6.944	42.343	1.287	0.299
0.600	6.924	42.301	3.859	0.303
0.900	6.891	42.231	6.468	0.308
1.200	6.846	42.132	9.134	0.316
1.500	6.786	42.001	11.883	0.328
1.800	6.713	41.838	14.747	0.343
2.100	6.625	41.640	17.761	0.363
2.400	6.522	41.403	20.972	0.389
2.700	6.404	41.121	24.444	0.424
3.000	6.269	40.789	28.257	0.469
3.300	6.117	40.394	32.533	0.532
3.600	5.945	39.920	37.460	0.622
3.900	5.753	39.336	43.353	0.759
4.200	5.537	38.578	50.842	0.995
4.500	5.296	37.436	61.705	1.549
4.669	5.148	35.647	79.160	2.539

TABLE 4A DIMENSIONS FOR CURRENT BLOCK #4
(INNER COIL COUNTED FROM THE POST)
NUMBER OF TURNS=21
MEDIAN RADIUS= 9.762 CM

X (CM)	Y (CM)	Z (CM)	PHI (DEG)	LARC (CM)
0.001	6.950	49.432		
0.500	6.932	49.406	1.473	0.500
1.000	6.878	49.326	4.426	0.506
1.500	6.786	49.191	7.433	0.518
2.000	6.656	48.999	10.527	0.536
2.500	6.485	48.747	13.749	0.562
3.000	6.269	48.429	17.153	0.598
3.500	6.004	48.037	20.803	0.646
4.000	5.684	47.561	24.790	0.712
4.500	5.296	46.984	29.242	0.804
5.000	4.827	46.279	34.356	0.938
5.500	4.249	45.401	40.465	1.144
6.000	3.507	44.250	48.233	1.503
6.500	2.460	42.511	59.518	2.342
6.794	1.469	39.670	78.196	4.022

TABLE 5A DIMENSIONS FOR CURRENT BLOCK #5
(OUTER COIL COUNTED FROM THE POST)
NUMBER OF TURNS=11
MEDIAN RADIUS= 6.490 CM

X (CM)	Y (CM)	Z (CM)	PHI (DEG)	LARC (CM)
0.001	7.780	38.010		
0.500	7.764	37.987	2.215	0.500
1.000	7.715	37.918	6.652	0.505
1.500	7.634	37.800	11.159	0.515
2.000	7.519	37.632	15.777	0.531
2.500	7.367	37.409	20.561	0.553
3.000	7.178	37.125	25.580	0.584
3.500	6.948	36.768	30.929	0.628
4.000	6.673	36.325	36.738	0.688
4.500	6.347	35.766	43.220	0.780
5.000	5.961	35.038	50.767	0.930
5.500	5.503	33.996	60.317	1.234
5.950	5.013	31.520	77.882	2.745

TABLE 6A DIMENSIONS FOR CURRENT BLOCK #6
(OUTER COIL COUNTED FROM THE POST)
NUMBER OF TURNS=18
MEDIAN RADIUS= 9.430 CM

X (CM)	Y (CM)	Z (CM)	PHI (DEG)	LARC (CM)
0.001	7.780	40.950		
0.500	7.764	40.928	1.524	0.500
1.000	7.715	40.862	4.576	0.505
1.500	7.634	40.750	7.670	0.514
2.000	7.519	40.592	10.832	0.527
2.500	7.367	40.385	14.091	0.546
3.000	7.178	40.124	17.486	0.572
3.500	6.948	39.806	21.061	0.605
4.000	6.673	39.423	24.872	0.650
4.500	6.347	38.964	29.000	0.709
5.000	5.961	38.416	33.549	0.788
5.500	5.503	37.755	38.680	0.901
6.000	4.953	36.938	44.667	1.070
6.500	4.275	35.881	52.030	1.353
7.000	3.395	34.322	62.163	1.982
7.331	2.605	31.520	79.092	3.590

TABLE 7A DIMENSIONS FOR CURRENT BLOCK #7
(OUTER COIL COUNTED FROM THE POST)
NUMBER OF TURNS=10
MEDIAN RADIUS=11.470 CM

X (CM)	Y (CM)	Z (CM)	PHI (DEG)	LARC (CM)
0.001	7.780	51.220		
0.500	7.764	51.196	1.253	0.500
1.000	7.715	51.124	3.763	0.505
1.500	7.634	51.003	6.309	0.514
2.000	7.519	50.830	8.912	0.528
2.500	7.367	50.605	11.601	0.548
3.000	7.178	50.323	14.405	0.575
3.500	6.948	49.980	17.364	0.610
4.000	6.673	49.570	20.525	0.656
4.500	6.347	49.082	23.953	0.717
5.000	5.961	48.506	27.736	0.798
5.500	5.503	47.820	32.002	0.910
6.000	4.953	46.996	36.951	1.071
6.500	4.275	45.977	42.928	1.322
7.000	3.395	44.644	50.635	1.764
7.500	2.068	42.584	62.171	2.855
7.740	0.788	39.750	79.650	4.144

TABLE 1B
FIELDS AND FORCES IN CURRENT BLOCK #1

NO IRON YOKE

NUMBER OF TURNS= 4 AT 4000 AMPERES

PHI (DEG)	B(X)	B(Y)	B(Z)	F(R)	F(PHI)	F(X)	F(Y)	F(Z)
	(TESLA)			(NEWTONS)				
8.221	0.0000	4.3852	-0.1595	10.124	-8.342	40.903	8.933	279.537
25.382	0.2230	4.3655	-0.1527	10.564	-0.149	131.792	-0.971	279.099
39.624	0.4444	4.2996	-0.1323	5.633	5.607	113.880	-9.246	138.653
51.372	0.5501	4.2369	-0.1153	6.318	9.226	168.174	-20.682	137.187
69.483	0.6501	4.1452	-0.0924	10.378	13.604	346.384	-56.554	133.506
85.555	0.7256	3.9375	-0.0530	2.979	1.247	136.318	-25.126	11.041

The use of tables:

Example: The force F(X) for $\phi = 85.55°$ (Block No. 1) is 136.318 N. Table (1A) gives at $\phi = 85.55°$ the arc length of 0.22 cm. The force component is thus 136.318/0.22 = 619.63 N/cm. The force f(X) per turn in block 1 is accordingly 154.9 N/cm.

In comparison: for $\phi = 76.531$ (table 2B), F(X) = 4585 N. Table (1B) indicates at $\phi = 76.531$ the arc length of 2.484 cm. Thus F(X)/L = 4585/2.484 = 1845.81 N/cm. The force per turn in 1845.81/20 = 92.2 N/cm.

TABLE 2B
FIELDS AND FORCES IN CURRENT BLOCK #2

NO IRON YOKE

NUMBER OF TURNS=20 AT 4000 AMPERES

PHI (DEG)	B(X)	B(Y)	B(Z)	F(R)	F(PHI)	F(X)	F(Y)	F(Z)
	(TESLA)			(NEWTONS)				
1.091	0.0000	2.0820	-1.1707	186.594	-174.901	17.793	186.425	331.293
3.265	0.0257	2.0796	-1.1725	188.593	-154.107	51.699	187.128	332.907
5.467	0.0500	2.0783	-1.1765	190.460	-131.240	86.253	186.373	332.759
7.709	0.0727	2.0726	-1.1802	193.400	-105.882	123.138	185.179	332.128
10.010	0.0926	2.0625	-1.1866	197.348	-82.762	157.989	183.690	331.133
13.016	0.1093	2.0504	-1.1913	306.129	-74.464	309.404	271.460	493.604
16.798	0.1285	2.0225	-1.1977	-78.815	152.427	139.877	-101.165	261.825
20.984	0.0000	0.1319	1.9615	-67.111	199.717	204.691	-107.343	241.453
25.740	0.1124	1.8509	-1.1753	363.964	136.757	633.888	226.284	508.553
31.236	0.2603	2.2727	-1.1242	376.404	326.132	924.665	132.173	629.485
37.981	0.4803	2.7064	-1.0092	379.558	568.012	1334.519	-47.414	755.084
46.992	0.7621	3.0725	-0.8236	391.980	843.303	1969.428	-374.421	873.299
57.651	1.0841	3.3373	-0.5916	300.304	729.458	2012.078	-625.486	644.807
76.531	1.3459	3.4713	-0.3866	605.207	724.566	4585.994	-1880.633	605.500

TABLE 3B
FIELDS AND FORCES IN CURRENT BLOCK #3

NO IRON YOKE

NUMBER OF TURNS=21 AT 4000 AMPERES

PHI (DEG)	B(X)	B(Y)	B(Z)	F(R)	F(PHI)	F(X)	F(Y)	F(Z)
	(TESLA)			(NEWTONS)				
1.287	0.0000	0.1420	-0.1542	38.995	-37.312	2.399	38.953	34.537
3.859	0.0108	0.1328	-0.1565	40.098	-34.695	6.989	39.737	31.001
6.468	0.0186	0.1112	-0.1630	41.917	-33.276	10.150	41.075	24.135
9.134	0.0216	0.0759	-0.1724	44.445	-33.809	10.824	43.319	13.108
11.883	0.0176	0.0223	-0.1844	48.350	-37.553	7.771	47.747	-4.072
14.747	-0.0004	-0.0580	-0.2021	54.148	-47.666	-2.462	56.328	-29.758
17.761	-0.0368	-0.1691	-0.2247	62.610	-66.891	-23.685	72.231	-67.989
20.972	-0.1034	-0.3294	-0.2560	75.119	-101.809	-64.588	102.095	-126.127
24.444	-0.2184	-0.5612	-0.3001	93.265	-110.440	-63.567	126.750	-120.661
28.258	-0.1470	-0.2527	-0.3624	122.102	-73.598	12.107	129.456	-41.701
32.533	-0.0686	0.0188	-0.4264	164.397	-34.231	105.174	129.723	29.960
37.460	0.0002	0.2536	-0.5131	239.197	3.924	229.871	136.710	95.880
43.353	0.0469	0.4803	-0.6464	386.143	43.198	433.493	157.435	170.925
50.842	0.0872	0.7904	-0.8642	675.586	103.286	850.722	147.247	294.738
61.705	0.2308	1.3198	-1.1079	1292.599	187.236	1880.395	-132.398	521.915
79.160	0.6506	2.1143	-1.1966	2286.245	133.199	4015.244	-1506.479	503.933

TABLE 4B
FIELDS AND FORCES IN CURRENT BLOCK #4

NO IRON YOKE

NUMBER OF TURNS=21 AT 4000 AMPERES

PHI (DEG)	B(X)	B(Y)	B(Z)	F(R)	F(PHI)	F(X)	F(Y)	F(Z)
	.....(TESLA).....			.....(NEWTONS).....				
1.473	0.0000	-0.9030	-0.2336	48.969	-57.814	-18.023	49.629	-380.267
4.426	-0.0616	-0.9092	0.0000	53.380	-84.508	-56.049	59.577	-390.522
7.433	-0.1292	-0.9299	-0.2532	114.003	-159.738	-86.872	131.226	-411.175
10.527	-0.2082	-0.9660	-0.2806	131.693	-200.214	-127.328	168.151	-445.436
13.749	-0.3080	-1.0209	-0.3219	160.314	-250.736	-173.718	227.230	-498.870
17.153	-0.4427	-1.0980	-0.3818	206.648	-315.076	-230.925	322.331	-582.031
20.803	-0.6362	-1.2075	-0.4669	280.567	-396.572	-307.946	478.203	-716.064
24.790	-0.9294	-1.3725	-0.5828	389.992	-411.736	-297.361	653.835	-751.906
29.242	-0.9617	-0.9977	-0.7304	537.275	-292.745	-88.238	751.324	-581.687
34.356	-0.7841	-0.4175	-0.8327	708.019	-118.589	238.662	753.410	-331.941
40.465	-0.5512	0.0894	-0.8722	906.074	35.732	636.125	652.924	-67.571
48.233	-0.2482	0.5130	-0.8332	1157.887	81.625	1121.334	389.693	235.894
59.518	0.1110	0.8139	-0.7066	1653.344	-129.206	1841.740	-112.023	596.986
78.196	0.3944	0.9705	-0.5178	2427.722	-536.581	2823.800	-1324.880	754.366

TABLE 5B
FIELDS AND FORCES IN CURRENT BLOCK #5

NO IRON YOKE

NUMBER OF TURNS=11 AT 4000 AMPERES

PHI (DEG)	B(X)	B(Y)	B(Z)	F(R)	F(PHI)	F(X)	F(Y)	F(Z)
	(TESLA)			(NEWTONS)				
2.215	0.0000	2.9131	0.1830	-40.255	44.586	28.217	-41.229	640.878
6.652	0.2213	2.9177	0.1824	-41.469	58.173	84.856	-50.278	650.606
11.159	0.4471	2.9314	0.1824	-43.276	79.021	146.576	-68.860	668.351
15.777	0.6846	2.9612	0.1765	-47.071	101.168	211.188	-99.430	696.598
20.561	0.9462	2.9965	0.1795	-54.681	124.345	278.601	-145.398	723.771
25.580	1.1934	2.9328	0.1880	-65.588	137.857	333.590	-202.349	721.968
30.929	1.3711	2.6611	0.1949	-81.823	139.856	375.287	-271.134	700.293
36.738	1.5295	2.3709	0.1990	-106.072	123.664	408.866	-357.168	683.192
43.220	1.6820	2.0736	0.2026	-147.062	92.690	440.255	-476.991	671.962
50.767	1.8348	1.7422	0.2019	-226.660	37.001	456.839	-656.124	661.653
60.317	1.9952	1.3161	0.1864	-409.449	-44.430	412.074	-952.907	616.572
77.882	2.0079	0.6223	0.1339	-1164.594	-160.671	612.123	-2468.897	599.845

TABLE 6B
FIELDS AND FORCES IN CURRENT BLOCK #6

NO IRON YOKE

NUMBER OF TURNS=18 AT 4000 AMPERES

PHI (DEG)	B(X)	B(Y)	B(Z)	F(R)	F(PHI)	F(X)	F(Y)	F(Z)
	.....(TESLA).....			.....(NEWTONS).....				
1.524	0.0000	0.1155	0.9895	-355.657	344.533	-9.617	-355.533	40.432
4.576	0.0772	0.1071	0.9862	-360.520	323.498	-30.069	-359.302	38.957
7.670	0.1546	0.0866	0.9793	-369.950	303.300	-51.426	-366.471	35.455
10.832	0.2311	0.0479	0.9703	-385.225	281.188	-77.680	-377.467	28.917
14.091	0.3027	-0.0100	0.9581	-407.044	254.810	-112.077	-391.398	16.687
17.486	0.3632	-0.0997	0.9406	-434.082	222.624	-157.011	-404.691	-7.736
21.061	0.3991	-0.2315	0.9097	-465.800	177.524	-222.187	-410.184	-52.677
24.872	0.3940	-0.4260	0.8647	-503.645	137.644	-279.509	-420.436	-63.015
29.000	0.4838	-0.4069	0.7987	-550.076	126.556	-277.375	-476.537	36.305
33.549	0.7386	-0.1885	0.7266	-610.224	117.979	-241.224	-589.578	195.192
38.680	0.9977	-0.0675	0.6459	-688.915	75.920	-221.079	-744.412	348.565
44.667	1.2343	-0.0405	0.5390	-795.372	-18.285	-231.338	-954.110	500.724
52.030	1.4318	-0.1104	0.4052	-961.896	-189.955	-305.595	-1254.394	660.058
62.163	1.5623	-0.2826	0.2341	-1339.662	-475.766	-557.974	-1818.612	847.589
79.092	1.5828	-0.5440	0.0627	-2419.563	-607.991	-1364.148	-3218.424	746.261

TABLE 7B
FIELDS AND FORCES IN CURRENT BLOCK #7

NO IRON YOKE

NUMBER OF TURNS=10 AT 4000 AMPERES

PHI (DEG)	B(X)	B(Y)	B(Z)	F(R)	F(PHI)	F(X)	F(Y)	F(Z)
	.....(TESLA).....			.....(NEWTONS).....				
1.253	0.0000	-0.3687	0.1247	-24.942	22.067	-4.346	-24.815	-73.822
3.763	-0.0093	-0.3707	0.1244	-25.611	16.088	-13.207	-24.445	-75.080
6.309	-0.0195	-0.3773	0.1242	-26.952	9.545	-22.548	-23.612	-77.366
8.912	-0.0314	-0.3881	0.1243	-29.207	2.087	-33.123	-22.260	-80.934
11.601	-0.0455	-0.4035	0.1249	-32.436	-5.872	-44.931	-20.143	-86.239
14.405	-0.0643	-0.4255	0.1259	-36.886	-15.057	-59.168	-16.704	-93.713
17.364	-0.0894	-0.4536	0.1278	-43.246	-25.165	-76.725	-11.549	-104.101
20.525	-0.1213	-0.4905	0.1322	-53.003	-36.188	-99.847	-4.000	-119.081
23.953	-0.1653	-0.5427	0.1428	-67.857	-48.579	-132.038	8.256	-140.799
27.736	-0.2288	-0.6084	0.1593	-91.745	-59.906	-177.832	27.608	-172.870
32.002	-0.3170	-0.6989	0.1934	-135.670	-67.976	-250.528	58.393	-221.586
36.951	-0.4390	-0.8244	0.2599	-220.225	-62.262	-370.819	107.878	-297.017
42.928	-0.6025	-1.0001	0.3777	-380.949	-19.980	-575.644	198.726	-414.680
50.635	-0.8152	-1.2243	0.5243	-635.250	82.585	-807.825	242.531	-463.121
62.171	-0.5021	-1.0885	0.5622	-1055.404	184.139	-1138.647	172.023	-387.184
79.650	-0.1580	-1.0316	0.4369	-1361.625	136.481	-1384.055	117.008	-170.058

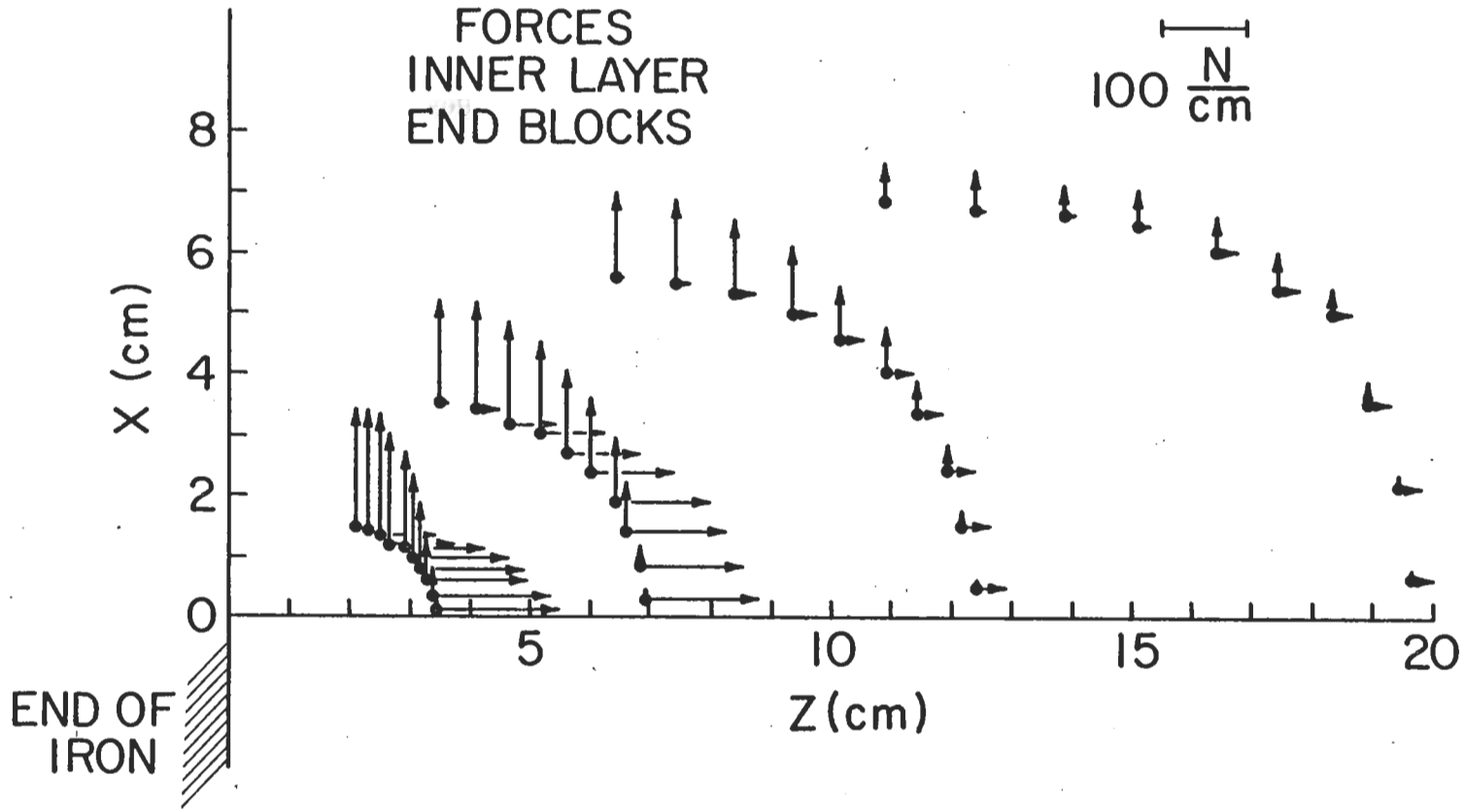

Figure 12: Force components F(X) and F(Z) per conductor in the inner layer (No iron) current blocks 1, 2, 3 and 4. The calculations are performed using MAG3.

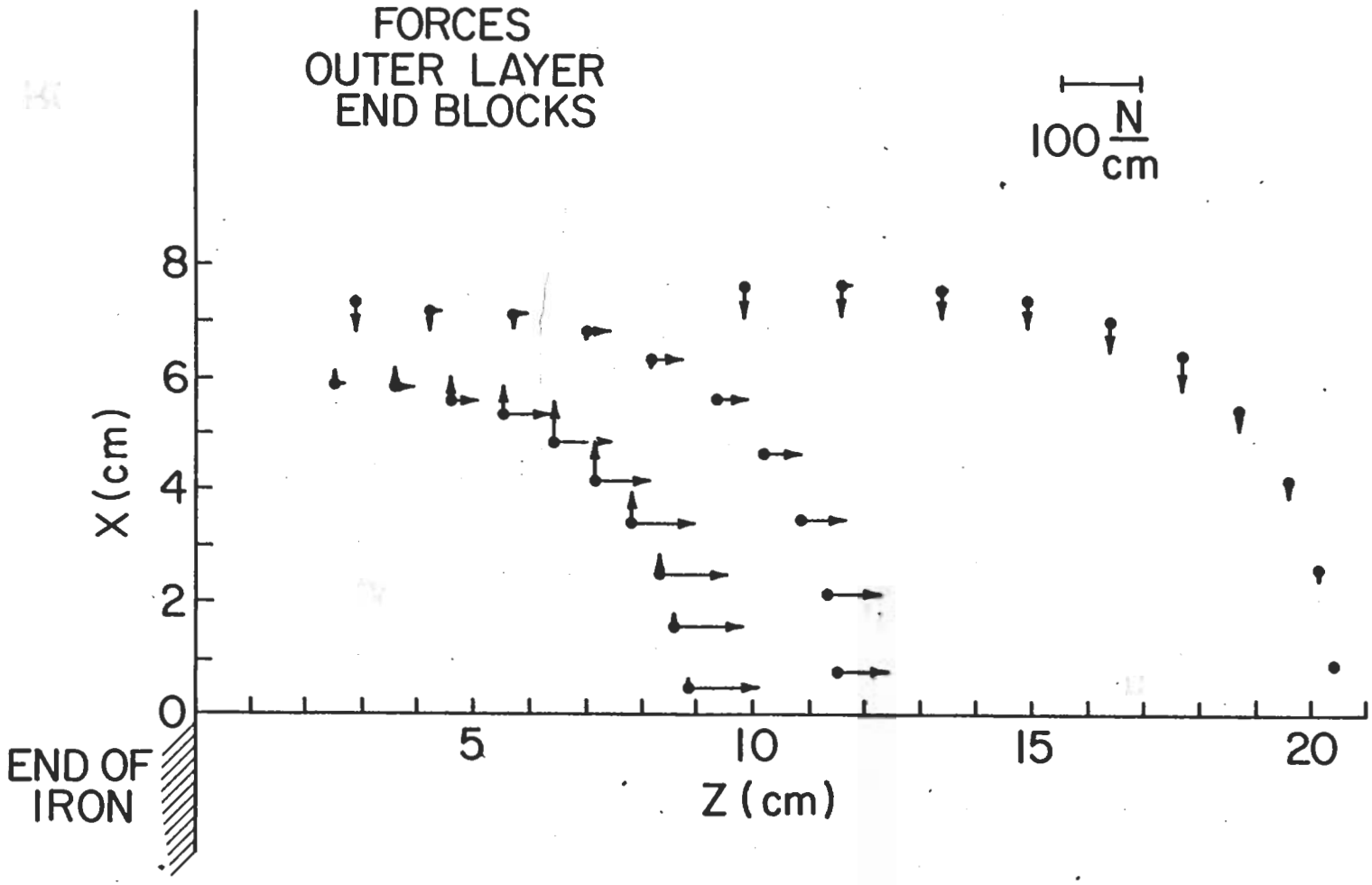

Figure 13: Force components F(X) and F(Z) per conductor in the outer layer, blocks, 5, 6 and 7. No iron. (Computation with MAG3).

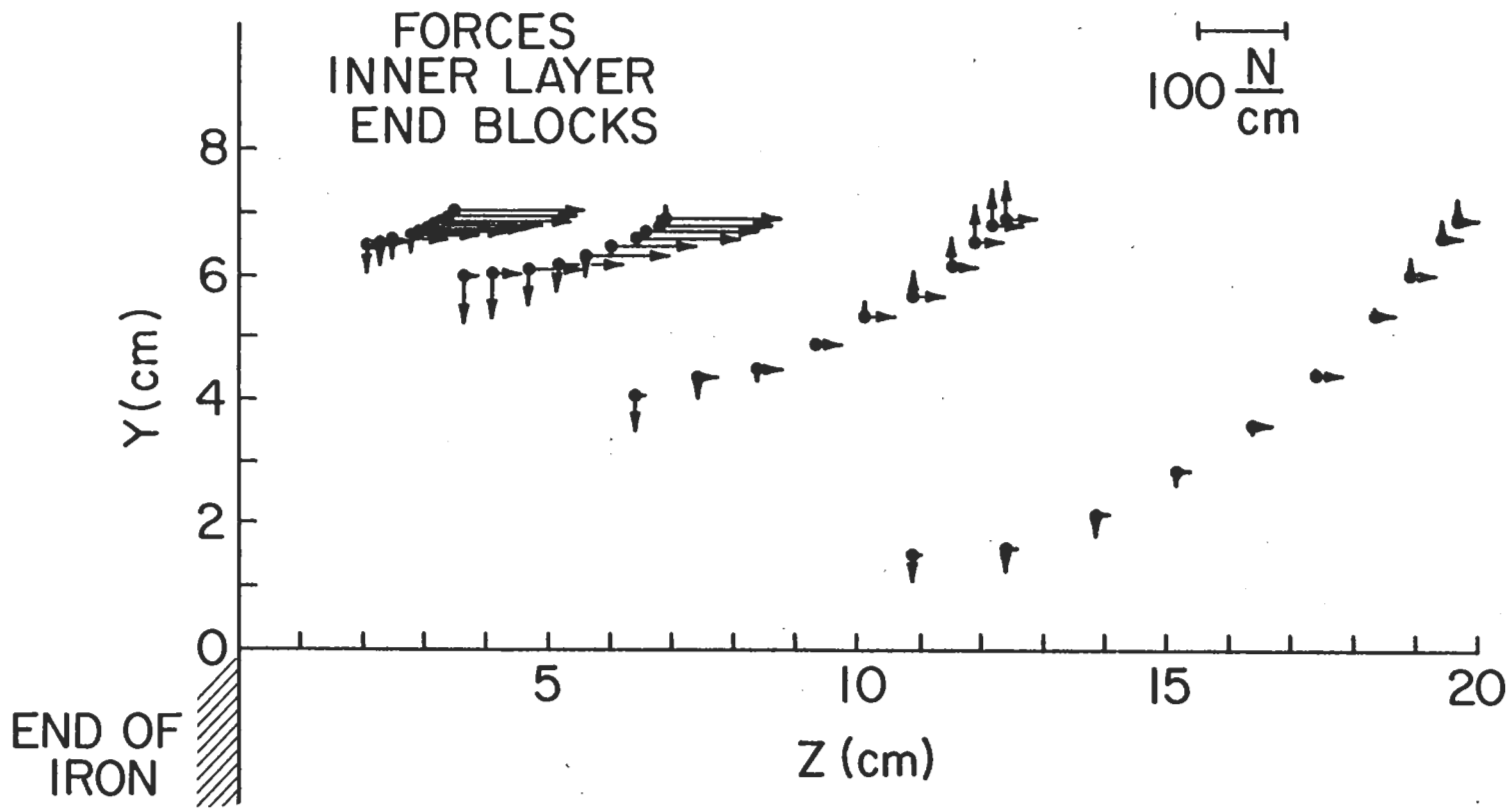

Figure 14: Force components F(Y) and F(Z) per conductor inner layer blocks 1, 2, 3 and 4. No iron. (Computation with MAG3).

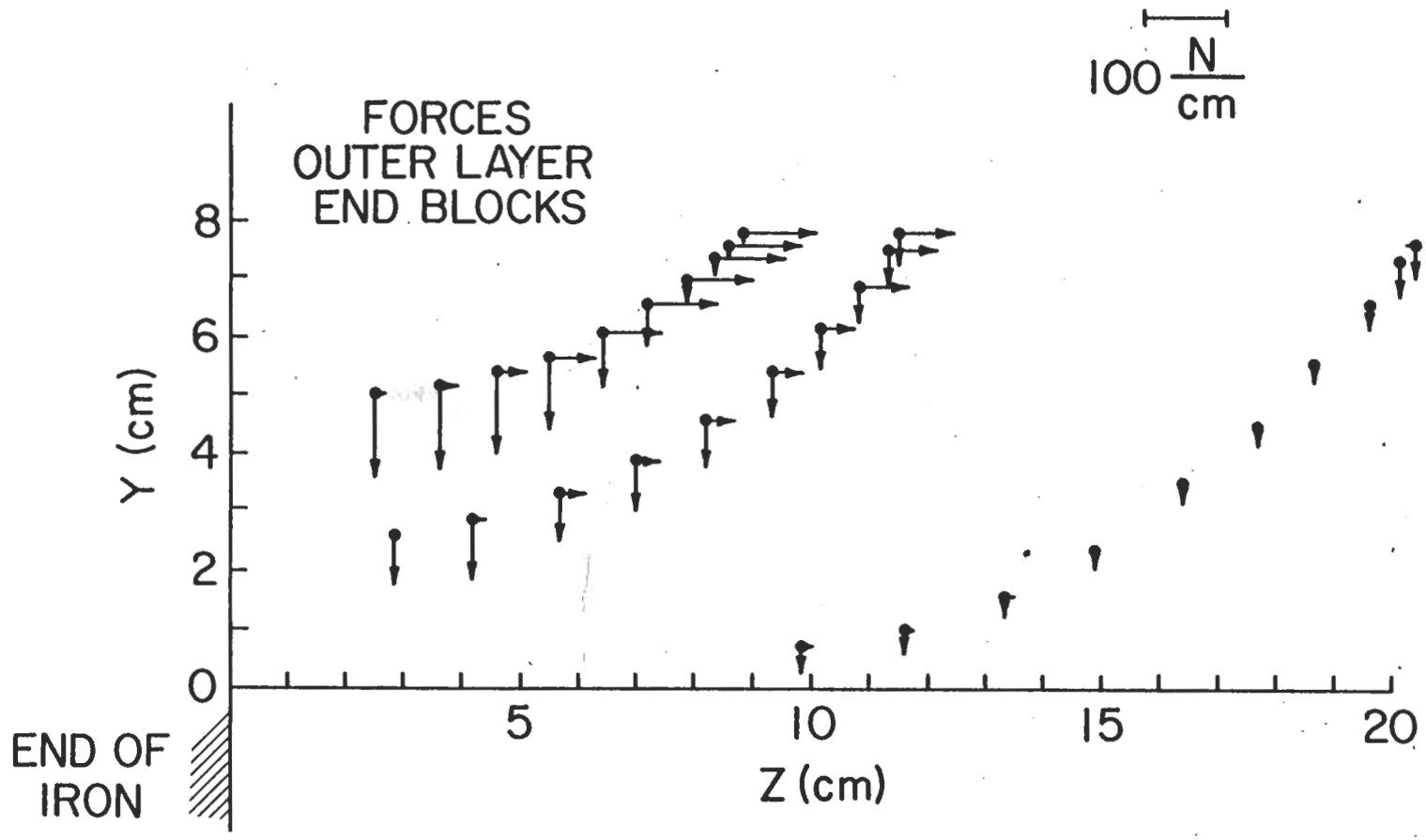

Figure 15: Force components F(Y) and F(Z) per conductor in the outer layer, blocks 5, 6 and 7. No iron. (Computation with MAG3).

TABLE 1C
FIELDS AND FORCES IN CURRENT BLOCK #1

IRON YOKE OVER ENTIRE LENGTH OF COIL

NUMBER OF TURNS= 4 AT 4000 AMPERES

PHI (DEG)	B(X)	B(Y)	B(Z)	F(R)	F(PHI)	F(X)	F(Y)	F(Z)
	.....(TESLA).....			.....(NEWTONS).....				
8.221	0.0000	5.9197	-0.5166	33.213	-30.006	55.850	31.594	377.674
25.382	0.2348	5.9051	-0.5073	36.636	-18.516	180.488	20.925	378.222
39.624	0.4676	5.8546	-0.4785	21.370	-1.397	156.769	1.003	188.721
51.372	0.5791	5.8044	-0.4530	25.783	3.868	232.899	-11.389	187.777
69.483	0.6853	5.7294	-0.4156	43.066	10.981	485.005	-50.120	184.870
85.555	0.7686	5.5488	-0.3409	13.717	1.206	193.085	-25.891	15.461

The forces F(X), F(Y) and F(Z) are illustrated in Figures 16 - 21.

TABLE 2C
FIELDS AND FORCES IN CURRENT BLOCK #2

IRON YOKE OVER ENTIRE LENGTH OF COIL

NUMBER OF TURNS=20 AT 4000 AMPERES

PHI (DEG)	B(X)	B(Y)	B(Z)	F(R)	F(PHI)	F(X)	F(Y)	F(Z)
	(TESLA)			(NEWTONS)				
1.091	0.0000	3.3932	-1.6040	255.629	-237.314	28.276	255.358	540.101
3.265	0.0296	3.3915	-1.6054	258.511	-204.609	82.119	256.166	543.015
5.467	0.0576	3.3922	-1.6080	261.500	-168.638	137.381	254.938	543.342
7.709	0.0836	3.3897	-1.6097	266.278	-128.823	196.477	253.054	543.404
10.010	0.1064	3.3839	-1.6133	272.719	-92.552	252.618	250.699	543.278
13.016	0.1254	3.3769	-1.6143	426.084	-60.450	496.910	369.941	813.786
16.843	0.1474	3.3582	-1.6140	453.919	29.616	639.653	360.987	807.621
21.029	0.1529	3.3079	-1.6034	492.768	118.837	790.013	350.755	791.113
25.740	0.1356	3.2097	-1.5744	538.687	261.138	1026.875	314.292	838.281
31.236	0.2868	3.6464	-1.5135	589.452	493.005	1420.523	214.681	964.047
37.981	0.5121	4.0997	-1.3885	654.445	782.841	1977.364	26.841	1096.433
46.992	0.8026	4.4938	-1.1928	781.449	1112.825	2861.695	-315.473	1225.224
57.651	1.1395	4.8036	-0.9494	700.978	945.644	2904.883	-606.835	888.786
76.531	1.4199	4.9881	-0.7304	1547.526	948.827	6701.168	-1987.475	838.966

TABLE 3C
FIELDS AND FORCES IN CURRENT BLOCK #3

IRON YOKE OVER ENTIRE LENGTH OF COIL

NUMBER OF TURNS=21 AT 4000 AMPERES

PHI (DEG)	B(X)	B(Y)	B(Z)	F(R)	F(PHI)	F(X)	F(Y)	F(Z)
	(TESLA)			(NEWTONS)				
1.287	0.0000	1.0326	-0.6430	161.949	-152.052	15.343	161.661	258.404
3.859	0.0160	1.0248	-0.6450	165.091	-132.504	46.725	162.467	256.387
6.468	0.0286	1.0071	-0.6506	170.230	-113.814	76.499	163.072	250.974
9.134	0.0355	0.9778	-0.6585	177.989	-96.811	104.492	164.307	241.957
11.883	0.0348	0.9320	-0.6687	189.835	-80.135	132.771	167.464	227.354
14.747	0.0196	0.8615	-0.6841	205.980	-71.699	153.744	174.573	204.781
17.761	-0.0140	0.7624	-0.7044	228.419	-71.072	167.833	188.724	170.415
20.972	-0.0773	0.6169	-0.7331	259.335	-85.635	166.877	216.442	117.172
24.444	-0.1883	0.4042	-0.7748	302.015	-73.064	215.010	238.374	128.988
28.258	-0.1121	0.7377	-0.8346	363.287	-15.965	346.230	237.587	216.249
32.533	-0.0286	1.0419	-0.8952	450.844	44.725	510.961	232.906	298.447
37.460	0.0455	1.3181	-0.9755	589.603	102.486	729.390	232.539	377.258
43.353	0.0972	1.5942	-1.0955	832.016	157.290	1063.506	242.046	466.745
50.842	0.1410	1.9577	-1.2892	1281.500	223.685	1685.272	215.617	605.552
61.705	0.2848	2.5417	-1.4979	2260.906	296.397	3157.804	-89.276	848.386
79.160	0.7003	3.4002	-1.5435	3898.292	176.883	6058.706	-1531.647	699.053

TABLE 4C
FIELDS AND FORCES IN CURRENT BLOCK #4

IRON YOKE OVER ENTIRE LENGTH OF COIL

NUMBER OF TURNS=21 AT 4000 AMPERES

PHI (DEG)	B(X)	B(Y)	B(Z)	F(R)	F(PHI)	F(X)	F(Y)	F(Z)
	(TESLA)			(NEWTONS)				
1.473	0.0000	-0.6930	-0.6907	291.362	-288.609	-4.687	291.704	-291.908
4.426	-0.0777	-0.6970	-0.6971	301.856	-294.395	-15.212	305.127	-301.036
7.433	-0.1611	-0.7107	-0.7177	323.380	-308.091	-25.013	332.891	-319.499
10.527	-0.2560	-0.7340	-0.7549	358.837	-331.545	-35.691	379.247	-349.727
13.749	-0.3713	-0.7683	-0.8102	413.251	-363.234	-45.618	451.077	-396.601
17.153	-0.5206	-0.8152	-0.8882	495.401	-404.856	-55.787	561.716	-469.258
20.803	-0.7250	-0.8812	-0.9944	616.812	-457.564	-70.523	733.388	-585.737
24.790	-1.0205	-0.9829	-1.1295	786.388	-436.000	23.098	919.264	-593.730
29.242	-1.0472	-0.5211	-1.2796	1010.008	-275.014	339.709	1016.695	-389.295
34.356	-0.8676	0.1532	-1.3522	1276.677	-67.414	791.792	1010.024	-110.362
40.465	-0.6382	0.7338	-1.3342	1601.375	102.161	1338.486	893.642	173.939
48.233	-0.3304	1.2142	-1.2204	2064.231	136.499	2049.503	613.712	494.680
59.518	0.0305	1.5864	-1.0118	3072.171	-123.801	3279.208	130.857	864.058
78.196	0.2969	1.8425	-0.7502	4942.879	-639.895	5385.133	-1210.065	981.504

TABLE 5C
FIELDS AND FORCES IN CURRENT BLOCK #5

IRON YOKE OVER ENTIRE LENGTH OF COIL:

NUMBER OF TURNS=11 AT 4000 AMPERES

PHI (DEG)	B(X)	B(Y)	B(Z)	F(R)	F(PHI)	F(X)	F(Y)	F(Z)
	(TESLA)			(NEWTONS)				
2.215	0.0000	4.1631	-0.3445	75.644	-64.947	44.609	74.184	916.226
6.652	0.2415	4.1752	-0.3424	76.765	-37.550	134.484	63.532	929.409
11.159	0.4770	4.2036	-0.3344	80.063	-0.899	231.162	41.849	950.771
15.777	0.7157	4.2466	-0.3276	85.084	36.284	331.587	7.446	981.768
20.561	0.9734	4.2901	-0.3077	90.840	74.141	437.383	-42.965	1009.965
25.580	1.2170	4.2256	-0.2787	97.384	100.247	532.599	-105.756	1008.053
30.929	1.4053	3.9474	-0.2494	104.195	114.228	622.143	-183.383	989.496
36.738	1.5899	3.6703	-0.2221	113.279	104.857	715.456	-280.307	981.516
43.220	1.7580	3.4112	-0.1960	128.261	75.171	831.026	-409.667	982.227
50.767	1.9059	3.1292	-0.1761	144.115	12.090	971.637	-593.322	981.924
60.473	2.0400	2.7511	-0.1754	147.067	-65.410	1187.522	-922.512	942.738
78.038	2.0347	2.0868	-0.2233	113.175	-253.155	2335.373	-2500.894	932.933

TABLE 6C
FIELDS AND FORCES IN CURRENT BLOCK #6

IRON YOKE OVER ENTIRE LENGTH OF COIL

NUMBER OF TURNS=18 AT 4000 AMPERES

PHI (DEG)	B(X)	B(Y)	B(Z)	F(R)	F(PHI)	F(X)	F(Y)	F(Z)
	(TESLA)			(NEWTONS)				
1.524	0.0000	1.0327	0.4201	-150.573	152.541	11.534	-151.031	371.454
4.576	0.0921	1.0321	0.4166	-150.843	157.858	34.363	-154.953	375.369
7.670	0.1755	1.0271	0.4089	-150.818	165.538	58.404	-162.542	378.287
10.832	0.2528	1.0052	0.3981	-150.753	171.057	79.715	-173.620	378.633
14.091	0.3256	0.9653	0.3836	-151.388	174.280	97.920	-188.647	375.045
17.486	0.3953	0.8991	0.3659	-153.408	174.814	112.004	-207.869	365.092
21.061	0.4574	0.8069	0.3438	-157.275	165.201	114.761	-228.260	345.535
24.872	0.4854	0.6791	0.3247	-158.320	159.993	138.215	-260.735	367.649
29.000	0.5891	0.7724	0.3007	-148.848	174.215	233.845	-338.480	495.135
33.549	0.8327	1.0513	0.2745	-126.569	174.674	375.051	-465.637	670.185
38.680	1.0593	1.2113	0.2387	-94.417	125.953	513.263	-627.359	822.938
44.667	1.2614	1.2348	0.1787	-61.727	10.591	649.751	-856.333	974.123
52.030	1.4848	1.1562	0.0915	-2.383	-210.426	825.726	-1206.996	1164.812
62.163	1.6608	1.0496	-0.0358	185.533	-598.699	1178.804	-1845.229	1419.630
79.092	1.6930	0.9345	-0.1702	621.120	-802.946	1973.231	-3439.179	1188.660

TABLE 7C
FIELDS AND FORCES IN CURRENT BLOCK #7

IRON YOKE OVER ENTIRE LENGTH OF COIL

NUMBER OF TURNS=10 AT 4000 AMPERES

PHI (DEG)	B(X)	B(Y)	B(Z)	F(R)	F(PHI)	F(X)	F(Y)	F(Z)
	(TESLA)			(NEWTONS)				
1.253	0.0000	-0.2678	-0.1722	34.535	-34.871	-1.472	34.601	-53.671
3.763	-0.0226	-0.2692	-0.1734	35.357	-36.463	-4.395	35.953	-54.988
6.309	-0.0465	-0.2739	-0.1762	36.834	-39.039	-7.657	38.584	-57.468
8.912	-0.0728	-0.2815	-0.1807	39.150	-42.671	-11.378	42.859	-61.375
11.601	-0.1028	-0.2919	-0.1871	42.554	-46.887	-15.299	49.206	-67.238
14.405	-0.1396	-0.3068	-0.1959	47.411	-52.693	-20.413	58.696	-75.532
17.364	-0.1860	-0.3255	-0.2074	54.054	-59.352	-26.617	72.385	-87.339
20.525	-0.2438	-0.3502	-0.2216	62.638	-66.821	-35.099	92.192	-104.640
23.953	-0.3192	-0.3865	-0.2387	75.441	-74.949	-46.089	123.071	-129.437
27.736	-0.4190	-0.4265	-0.2715	97.196	-78.622	-54.465	170.775	-161.722
32.002	-0.5418	-0.4489	-0.3293	126.388	-69.786	-56.087	234.574	-197.490
36.951	-0.6764	-0.4101	-0.3450	117.141	-41.690	-86.165	292.451	-247.488
42.928	-0.7780	-0.4649	-0.1826	17.868	10.764	-201.465	353.034	-333.748
50.635	-0.9084	-0.5858	0.0892	-121.464	99.961	-301.068	369.206	-356.665
62.171	-0.6060	-0.3156	0.2561	-248.128	187.103	-348.928	343.803	-306.161
79.650	-0.3461	-0.2194	0.2282	-138.236	87.093	-160.054	181.800	-95.666

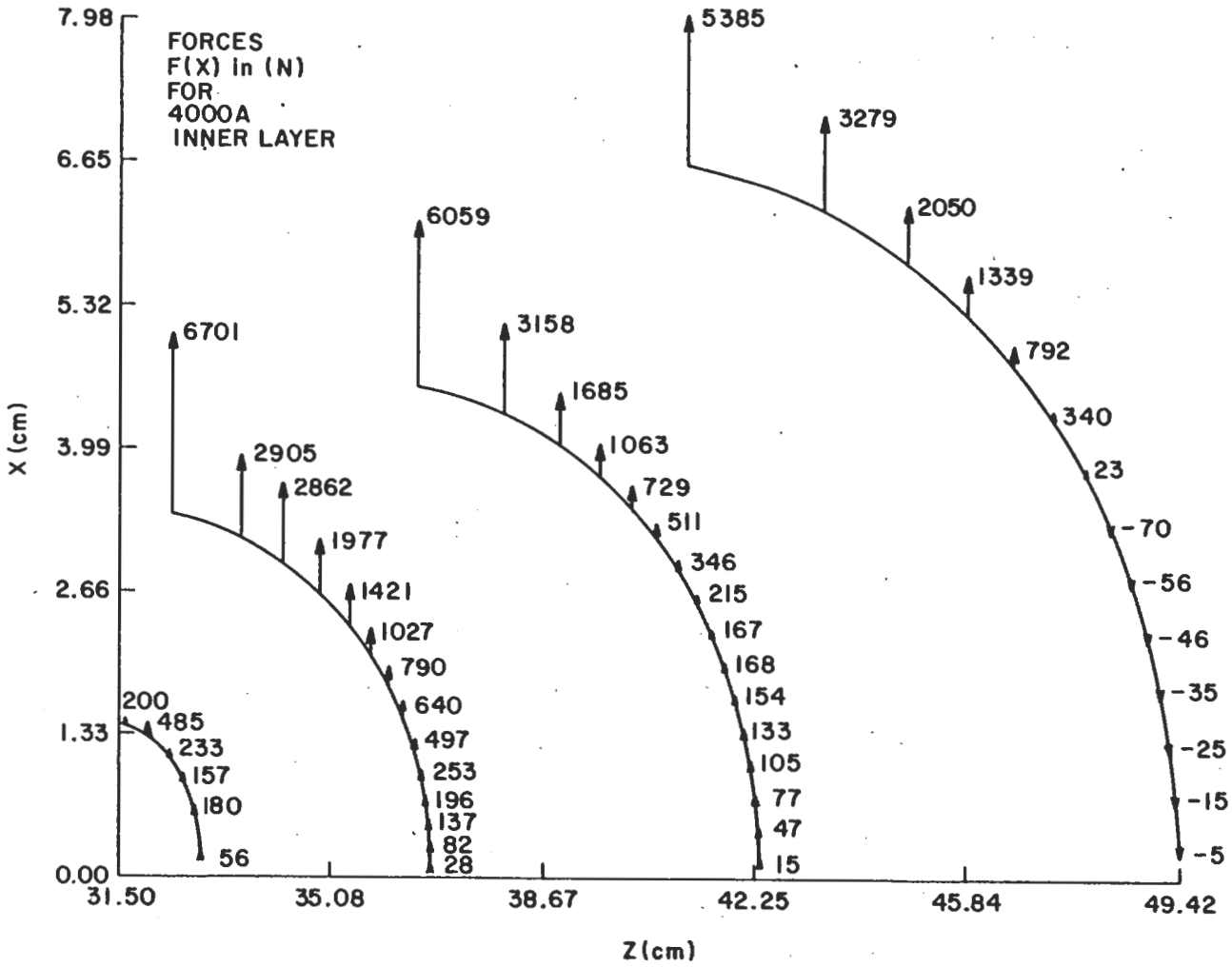

Figure 16. Lorentz Force Components F(X) acting at increments of current elements. The coil end sections are enclosed in iron laminations. Inner layer with block 1 (4 turns), block 2 (20 turns), block 3 (21 turns), block 4 (2 turns).

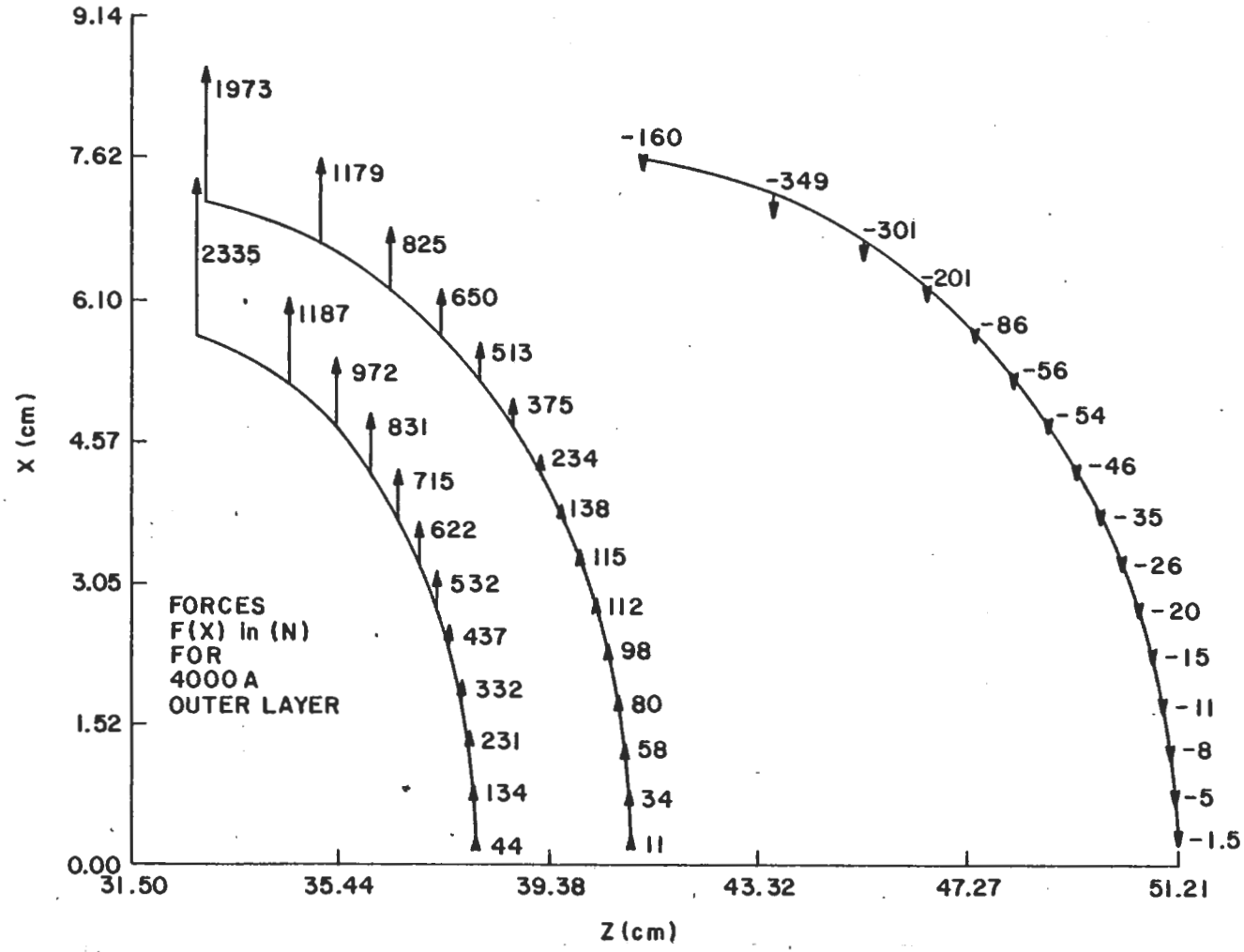

Figure 17: Lorentzforce components F(X) acting at increments of current elements. Coil end sections are shielded by iron lamination. Outer layer with block 5 (11 turns), block 6 (18 turns), block 7 (10 turns).

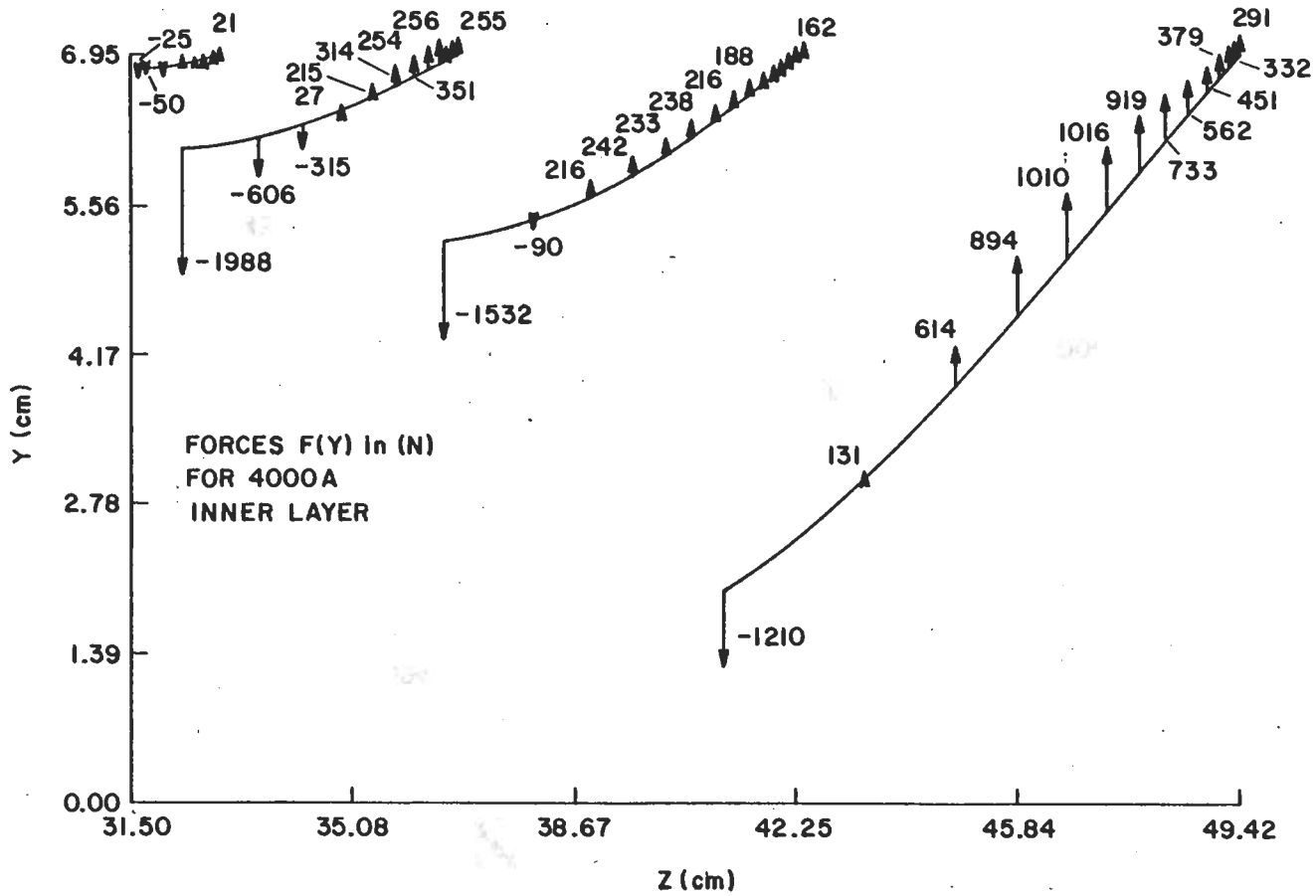

Figure 18: Lorentz force components F(Y) acting at increments of current elements. Coil end sections are enclosed in iron laminations. Inner layer with block 1 (4 turns), block 2 (20 turn), block 3 (21 turn), block 4 (21 turns).

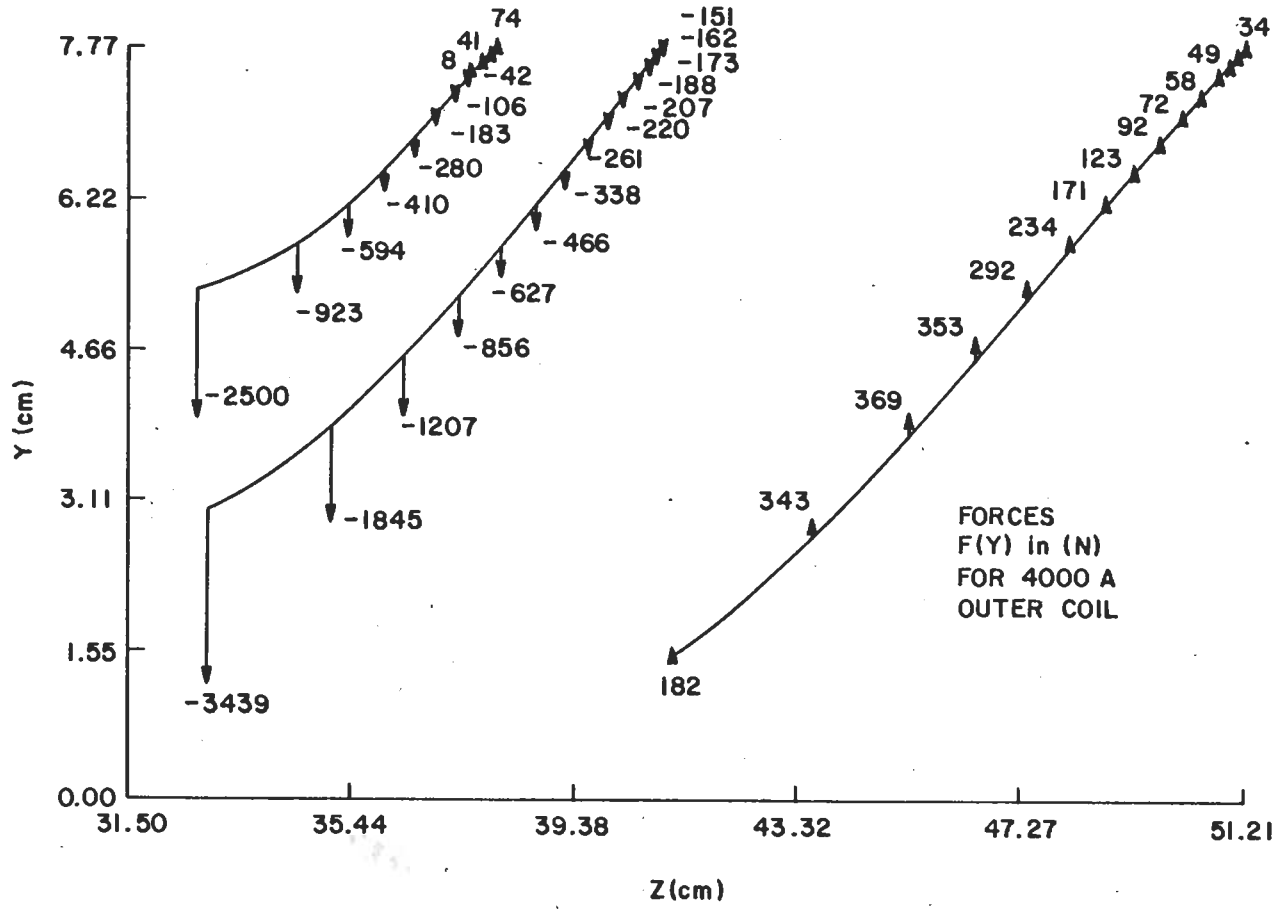

Figure 19: Lorentz force components F(Y) acting at increments of current elements. Coil ends are enclosed in iron lamination. Outer layer block 5 (11 turns), block 6 (18 turns) block 7 (10 turns).

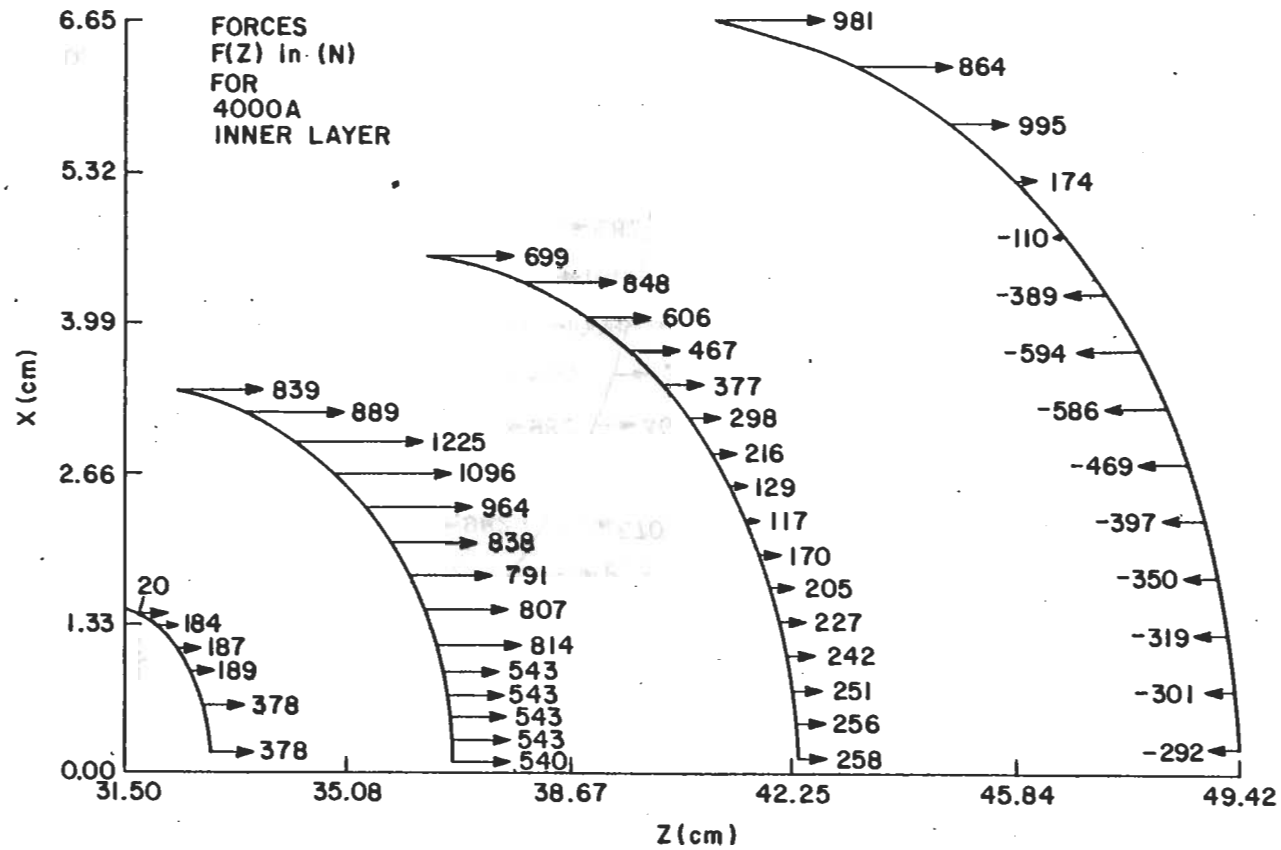

Figure 20: Lorentz force components F(Z) acting at increments of current elements. Coil ends are shielded by iron laminations. Inner layer, block 1 (4 turns), block 2 (20 turns), block 3 (21 turns), block 4 (21 turn).

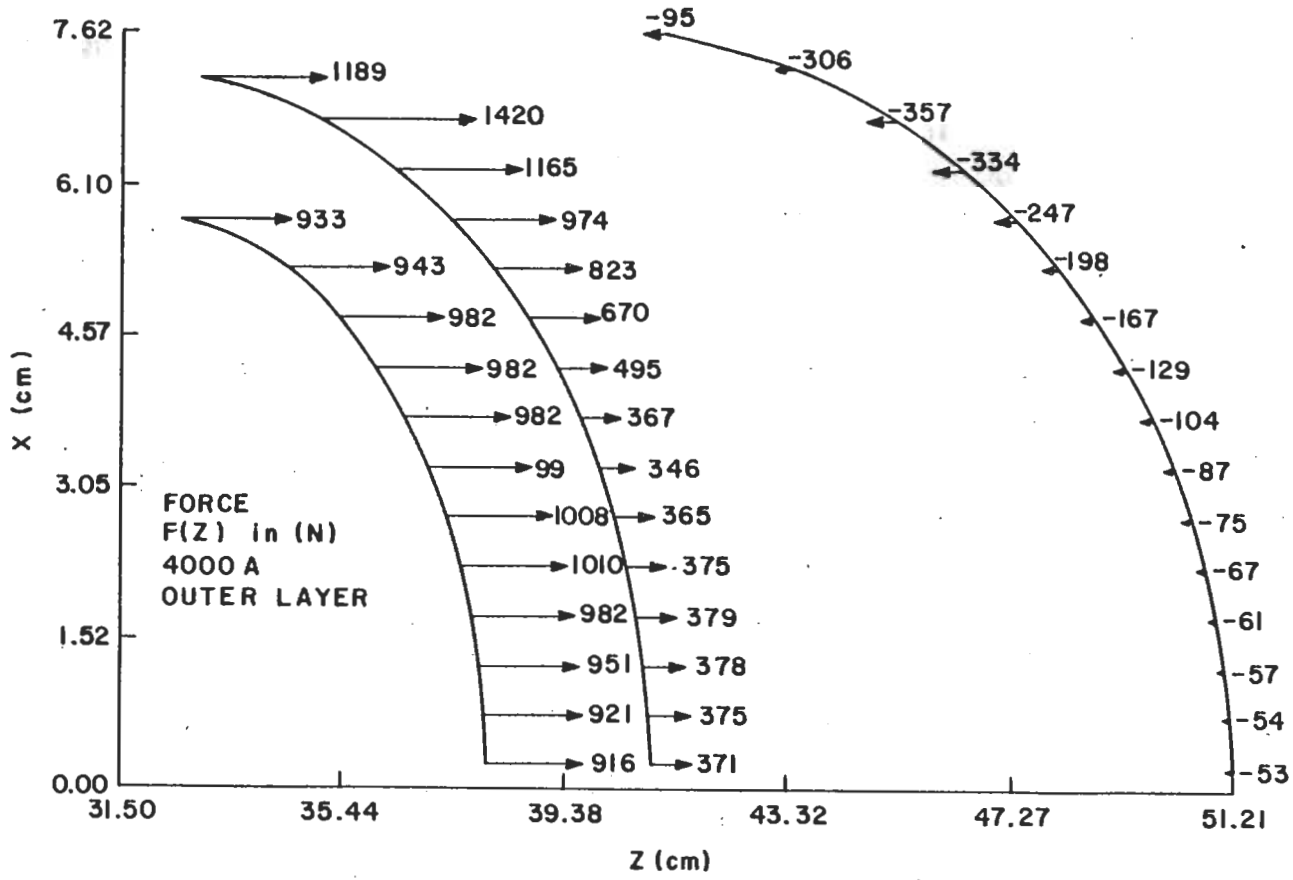

Figure 21: Lorentz forces F(Z) acting on current elements. The coil ends are enclosed in iron lamination. Outer layer with block 5 (11 turns), block 6 (18 turns) block 7 (10 turns).

Attention must be given to the F(x) force for the present CBA dipole (Tables 1D through 7D). The forces for $\phi > 45°$ are substantial in block 2, 3 and 4 acting outward, while the forces in block 7 act inward. To calculate stresses and conductor motion the following example may show how to use the tables:

Current CBA-Dipole Design Current Block No. 4:

Table 4D shows that at $\phi = 59.5°$ (counted from the z-axis) the force F(x) is 2033.7N. From Table 4A we obtain the corresponding dimensions and the location of the block. The arc length of the filament at which the force is acting is 2.342 cm which is obtained by comparison of the ϕ-values of Tables 4A and 4D. Also we get x=6.5 cm, y=2.4 cm and z=42.5 cm.

VII. CONCLUSION

The data presented on fields and on forces acting on the conductor at the current level of 4000A should permit accurate caclulations of mechanical stresses as well as conductor motion. Even if small samples of insulated conductor are tested for elastic modulus in tension and compression for each batch of cable, the mechanical properties of the cured cable wound into coils are not exactly known. Some of the insulation properties such as flexural strength must also be monitored at nitrogen temperature. If we assume that the conductor of each current block behaves as a monolithic unit, the bondshear between adjacent turns must be sufficiently high (> 80 MPa or 10,000 psi). Generally the monolithic assumption is not correct for the bond strength of coil ends is much smaller to that of the straight section. As the forces per conductor are very high as seen from Fig. 22, special care is necessary in coil assembly and compaction. Bondshear strength as well as friction data must be provided as a function of compaction and the data incorporated in the calculation of stresses and motion.

The field enhancement at the coil ends is not as severe as was anticipated from earlier field calculations. An enhancement of approximately 6% over the high field value in the coil straight section is easily correctable without reducing the level of the magnet operation. We recommend that the iron yoke laminations should be extended over the entire coil length.

A final note referring to the "2 in 1" design: Since the F(x) forces are substantial, if the coilends are not shielded by ferromagnetic iron lamination they interact mechanically with each other. It is difficult to support individual turns, or individual current blocks, thus the coilends effect each other magnetomechanically and conductor motion is thus envisioned. Since the conductor relative motion is not smooth, but in sudden steps, which corresponds to sufficient and necessary accumulation of Lorentz energy, the possibility of training quenches can not be discarded. A complete shielding of the two coils not only eliminates the forces acting between the two coil halves but also may result in a less expensive yoke design.

TABLE 1D
FIELDS AND FORCES IN CURRENT BLOCK #1

IRON YOKE OVER THE COIL
STRAIGHT SECTION COIL ENDS WITH NO IRON

NUMBER OF TURNS= 4 AT 4000 AMPERES

PHI (DEG)	B(X)	B(Y)	B(Z)	F(R)	F(PHI)	F(X)	F(Y)	F(Z)
	.....(TESLA).....			.....(NEWTONS).....				
8.221	0.0000	4.6918	-0.6189	39.709	-36.621	44.649	38.421	299.206
25.382	0.2153	4.6753	-0.6160	41.935	-25.276	143.873	29.460	299.193
39.624	0.4288	4.6197	-0.6089	22.800	-5.010	124.516	6.673	148.974
51.372	0.5303	4.5664	-0.6041	25.491	0.392	184.199	-3.843	147.851
69.483	0.6259	4.4893	-0.6009	35.825	8.038	380.500	-37.245	144.888
85.555	0.6965	4.3150	-0.6086	8.298	1.078	150.164	-22.555	12.069

The forces F(X), F(Y) and F(Z) are illustrated in Figures 22 - 27.

TABLE 2D
FIELDS AND FORCES IN CURRENT BLOCK #2

IRON YOKE OVER THE COIL
STRAIGHT SECTION COIL ENDS WITH NO IRON

NUMBER OF TURNS=20 AT 4000 AMPERES

PHI (DEG)	B(X)	B(Y)	B(Z)	F(R)	F(PHI)	F(X)	F(Y)	F(Z)
	(TESLA)			(NEWTONS)				
1.091	0.0000	2.2661	-1.4098	224.699	-211.639	19.694	224.513	360.623
3.265	0.0235	2.2640	-1.4118	227.160	-188.570	57.267	225.545	362.444
5.467	0.0456	2.2635	-1.4165	228.549	-183.599	75.054	225.072	361.613
7.709	0.0661	2.2589	-1.4215	234.830	-115.267	156.980	224.319	363.046
10.010	0.0837	2.2507	-1.4297	238.499	-109.942	175.339	223.422	361.220
13.016	0.0980	2.2410	-1.4367	370.953	-110.252	344.206	332.598	539.371
16.843	0.1136	2.2178	-1.4478	392.058	-48.540	440.481	328.995	531.525
21.029	0.1131	2.1632	-1.4517	420.757	10.581	538.003	325.587	513.227
25.740	0.0893	2.0611	-1.4403	451.382	120.024	711.268	298.042	558.440
31.236	0.2324	2.4939	-1.4005	479.130	317.651	1025.674	210.586	681.720
37.981	0.4470	2.9425	-1.3010	506.697	569.470	1470.622	41.024	810.594
46.992	0.7221	3.3292	-1.1375	564.123	857.616	2167.493	-268.891	933.734
57.651	1.0358	3.6257	-0.9404	470.115	748.910	2219.656	-536.249	689.454
76.531	1.2901	3.7947	-0.7763	998.366	756.400	5125.284	-1732.521	654.464

TABLE 3D
FIELDS AND FORCES IN CURRENT BLOCK #3

IRON YOKE OVER THE COIL
STRAIGHT SECTION COIL ENDS WITH NO IRON

NUMBER OF TURNS=21 AT 4000 AMPERES

PHI (DEG)	B(X)	B(Y)	B(Z)	F(R)	F(PHI)	F(X)	F(Y)	F(Z)
	(TESLA)			(NEWTONS)				
1.287	0.0000	0.2430	-0.2554	64.455	-61.602	4.099	64.383	59.940
3.859	0.0095	0.2341	-0.2577	66.010	-56.671	12.275	65.366	56.555
6.468	0.0161	0.2131	-0.2646	68.677	-53.087	19.001	67.047	49.826
9.134	0.0177	0.1787	-0.2754	72.334	-51.424	23.320	69.645	39.009
11.883	0.0124	0.1264	-0.2873	77.788	-52.490	24.545	74.461	22.106
14.747	-0.0070	0.0480	-0.3060	85.725	-60.326	18.624	83.695	-3.205
17.761	-0.0448	-0.0608	-0.3300	97.037	-77.055	2.416	100.438	-40.978
20.972	-0.1130	-0.2181	-0.3629	113.253	-109.422	-32.746	131.375	-98.546
24.444	-0.2296	-0.4463	-0.4091	136.274	-115.412	-24.913	157.411	-92.370
28.258	-0.1600	-0.1335	-0.4740	171.501	-75.921	58.953	161.873	-12.552
32.533	-0.0836	0.1435	-0.5412	222.580	-33.772	162.585	164.489	60.185
37.460	-0.0169	0.3851	-0.6319	309.844	7.217	301.506	174.685	127.439
43.353	0.0271	0.6205	-0.7705	475.639	49.109	525.695	200.131	204.252
50.842	0.0642	0.9421	-0.9956	797.527	111.499	977.390	197.753	330.478
61.705	0.2035	1.4880	-1.2503	1489.974	196.540	2086.145	-64.367	561.607
79.160	0.6165	2.3105	-1.3603	2624.745	137.864	4373.659	-1418.717	530.530

TABLE 4D
FIELDS AND FORCES IN CURRENT BLOCK #4

IRON YOKE OVER THE COIL
STRAIGHT SECTION COIL ENDS WITH NO IRON

NUMBER OF TURNS=21 AT 4000 AMPERES

PHI (DEG)	B(X)	B(Y)	B(Z)	F(R)	F(PHI)	F(X)	F(Y)	F(Z)
	.....(TESLA).....			.....(NEWTONS).....				
1.473	0.0000	-0.8497	-0.2730	115.509	-121.223	-14.461	116.085	-357.900
4.426	-0.0623	-0.8557	-0.2776	120.813	-141.640	-45.248	126.245	-368.017
7.433	-0.1305	-0.8759	-0.2927	132.173	-170.088	-77.650	148.042	-388.479
10.527	-0.2103	-0.9113	-0.3202	151.494	-208.034	-114.062	185.215	-422.442
13.749	-0.3108	-0.9649	-0.3616	182.453	-255.982	-155.970	244.635	-475.468
17.153	-0.4462	-1.0404	-0.4218	232.039	-317.663	-207.986	340.186	-558.091
20.803	-0.6405	-1.1478	-0.5070	310.395	-396.503	-278.862	496.636	-691.428
24.790	-0.9344	-1.3100	-0.6232	425.857	-409.138	-260.796	672.998	-726.380
29.242	-0.9676	-0.9316	-0.7709	581.657	-287.724	-41.896	771.413	-555.037
34.356	-0.7908	-0.3469	-0.8733	764.722	-111.677	298.283	774.692	-303.814
40.465	-0.5588	0.1661	-0.9127	981.802	43.472	715.394	675.773	-37.471
48.233	-0.2567	0.5982	-0.8732	1267.051	88.021	1234.317	414.763	268.814
59.518	0.1018	0.9118	-0.7452	1841.493	-129.600	2033.728	-83.054	634.745
78.196	0.3850	1.0915	-0.5523	2803.055	-549.676	3202.627	-1293.874	785.030

TABLE 5D
FIELDS AND FORCES IN CURRENT BLOCK #5

IRON YOKE OVER THE COIL
STRAIGHT SECTION COIL ENDS WITH NO IRON

NUMBER OF TURNS=11 AT 4000 AMPERES

PHI (DEG)	B(X)	B(Y)	B(Z)	F(R)	F(PHI)	F(X)	F(Y)	F(Z)
	(TESLA)			(NEWTONS)				
2.215	0.0000	3.0539	-0.0273	6.035	0.137	31.127	4.990	671.846
6.652	0.2165	3.0591	-0.0282	5.838	17.231	93.728	-3.628	681.767
11.159	0.4373	3.0747	-0.0291	5.945	41.729	161.667	-21.501	699.788
15.777	0.6698	3.1076	-0.0367	5.171	67.610	233.039	-50.964	728.454
20.561	0.9261	3.1476	-0.0362	1.984	94.771	308.281	-95.351	756.205
25.580	1.1679	3.0904	-0.0309	-2.841	112.100	372.202	-150.137	755.200
30.929	1.3396	2.8272	-0.0284	-10.469	118.113	425.149	-215.931	734.562
36.738	1.4916	2.5482	-0.0300	-22.677	105.744	473.058	-297.865	718.831
43.220	1.6369	2.2659	-0.0340	-45.567	78.582	524.734	-411.688	709.440
50.767	1.7815	1.9548	-0.0452	-95.534	26.338	573.220	-581.329	701.927
60.317	1.9318	1.5597	-0.0765	-218.102	-52.627	591.891	-859.575	661.834
77.882	1.9304	0.9192	-0.1580	-690.177	-169.837	1089.281	-2293.839	651.922

TABLE 6D
FIELDS AND FORCES IN CURRENT BLOCK #6

IRON YOKE OVER THE COIL
STRAIGHT SECTION COIL ENDS WITH NO IRON

NUMBER OF TURNS=18 AT 4000 AMPERES

PHI (DEG)	B(X)	B(Y)	B(Z)	F(R)	F(PHI)	F(X)	F(Y)	F(Z)
	(TESLA)			(NEWTONS)				
1.524	0.0000	0.2206	0.8558	-307.487	298.686	-6.408	-307.442	78.255
4.576	0.0743	0.2127	0.8524	-311.317	282.066	-20.297	-310.824	76.998
7.670	0.1487	0.1933	0.8450	-318.825	266.364	-34.888	-317.390	73.791
10.832	0.2222	0.1566	0.8352	-331.109	248.805	-53.924	-327.462	67.698
14.120	0.2907	0.1015	0.8220	-355.874	235.974	-78.704	-348.163	56.070
17.515	0.3480	0.0158	0.8031	-360.849	192.694	-114.798	-342.516	32.462
21.061	0.3805	-0.1109	0.7704	-393.856	159.691	-170.587	-355.005	-11.454
24.872	0.3718	-0.2989	0.7233	-421.377	124.866	-215.055	-362.451	-20.505
29.000	0.4577	-0.2713	0.6549	-453.809	118.966	-196.704	-414.933	80.427
33.549	0.7083	-0.0421	0.5799	-494.766	115.473	-139.501	-523.326	241.338
38.680	0.9628	0.0928	0.4960	-545.908	78.214	-90.256	-671.967	397.327
44.667	1.1944	0.1386	0.3854	-609.810	-11.848	-56.658	-872.936	552.982
52.247	1.3862	0.0948	0.2474	-740.675	-160.288	-54.794	-1233.838	717.327
62.380	1.5106	-0.0378	0.0719	-865.997	-489.971	-131.009	-1619.269	913.610
79.092	1.5238	-0.2271	-0.1063	-1479.148	-614.986	-428.030	-3034.257	804.920

TABLE 7D
FIELDS AND FORCES IN CURRENT BLOCK #7

IRON YOKE OVER THE COIL
STRAIGHT SECTION COIL ENDS WITH NO IRON

NUMBER OF TURNS=10 AT 4000 AMPERES

PHI (DEG)	B(X)	B(Y)	B(Z)	F(R)	F(PHI)	F(X)	F(Y)	F(Z)
	.....(TESLA).....			.....(NEWTONS).....				
1.253	0.0000	-0.3249	0.0899	-17.976	15.576	-3.702	-17.866	-65.064
3.763	-0.0098	-0.3268	0.0896	-18.461	10.505	-11.254	-17.452	-66.274
6.309	-0.0207	-0.3330	0.0893	-19.457	4.877	-19.259	-16.557	-68.498
8.912	-0.0331	-0.3433	0.0893	-21.164	-1.615	-28.377	-15.108	-71.971
11.601	-0.0478	-0.3578	0.0898	-23.626	-8.614	-38.626	-12.862	-77.146
14.405	-0.0673	-0.3786	0.0906	-27.039	-16.829	-51.127	-9.252	-84.450
17.364	-0.0929	-0.4053	0.0923	-32.026	-25.956	-66.696	-3.881	-94.622
20.525	-0.1255	-0.4404	0.0964	-39.982	-36.010	-87.490	3.936	-109.335
23.953	-0.1702	-0.4903	0.1067	-52.421	-47.427	-116.808	16.529	-130.722
27.736	-0.2345	-0.5531	0.1230	-73.099	-57.885	-159.046	36.292	-162.382
32.002	-0.3235	-0.6400	0.1569	-112.532	-65.210	-226.998	67.598	-210.581
36.951	-0.4463	-0.7608	0.2232	-190.655	-59.107	-340.749	117.735	-285.351
42.928	-0.6106	-0.9302	0.3411	-341.381	-17.055	-535.598	209.401	-402.132
50.635	-0.8241	-1.1457	0.4888	-577.825	83.923	-750.133	254.373	-449.298
62.171	-0.5115	-0.9966	0.5283	-952.804	180.624	-1036.080	185.648	-371.066
79.650	-0.1667	-0.9141	0.4095	-1186.095	1.754	-1212.563	162.186	-30.467

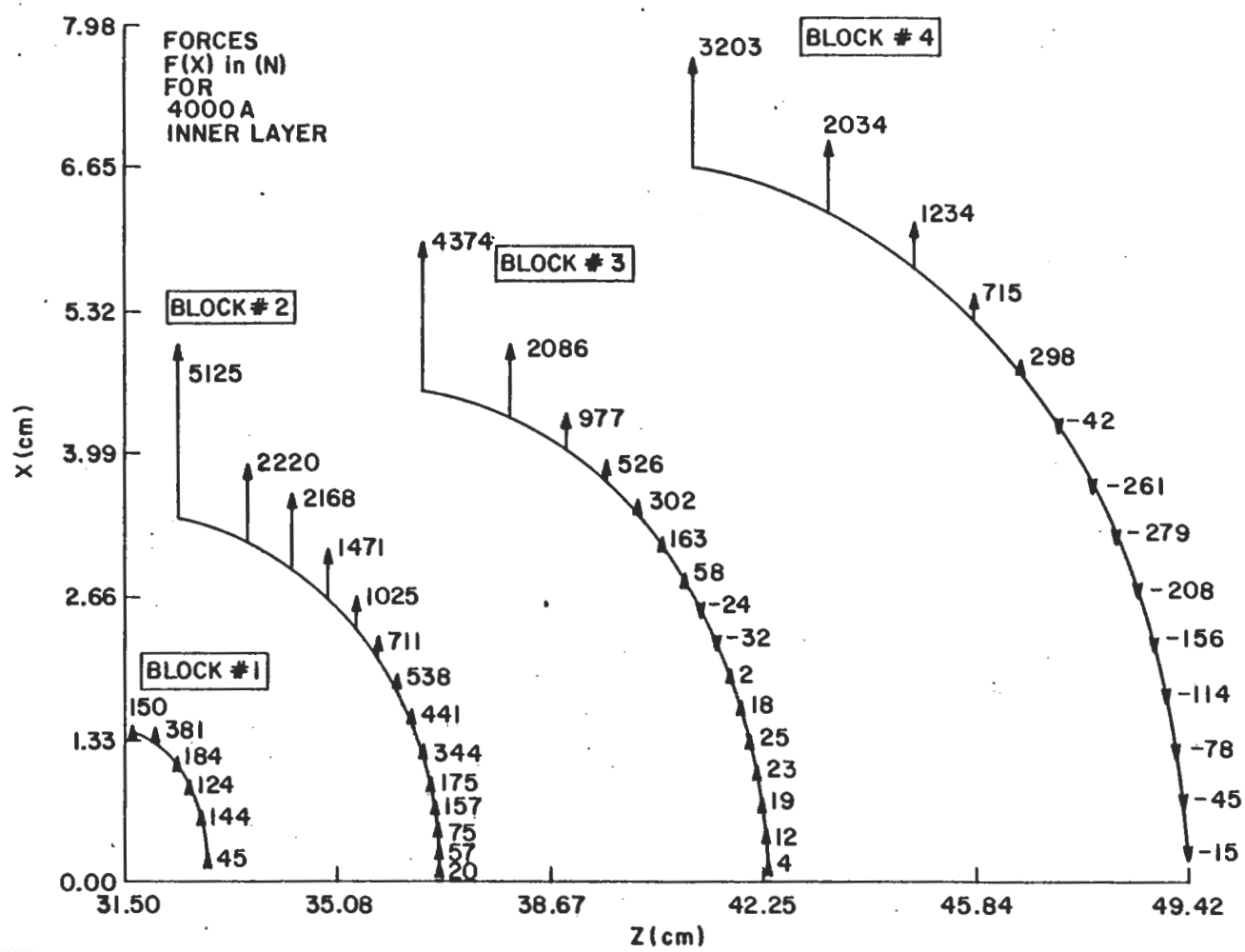

Figure 22: Force components F(X) acting on conductor blocks of the inner coil layer. Coil ends are not enclosed by iron lamination. The coil straight section extends 2 cm beyond the iron lamination (present design).

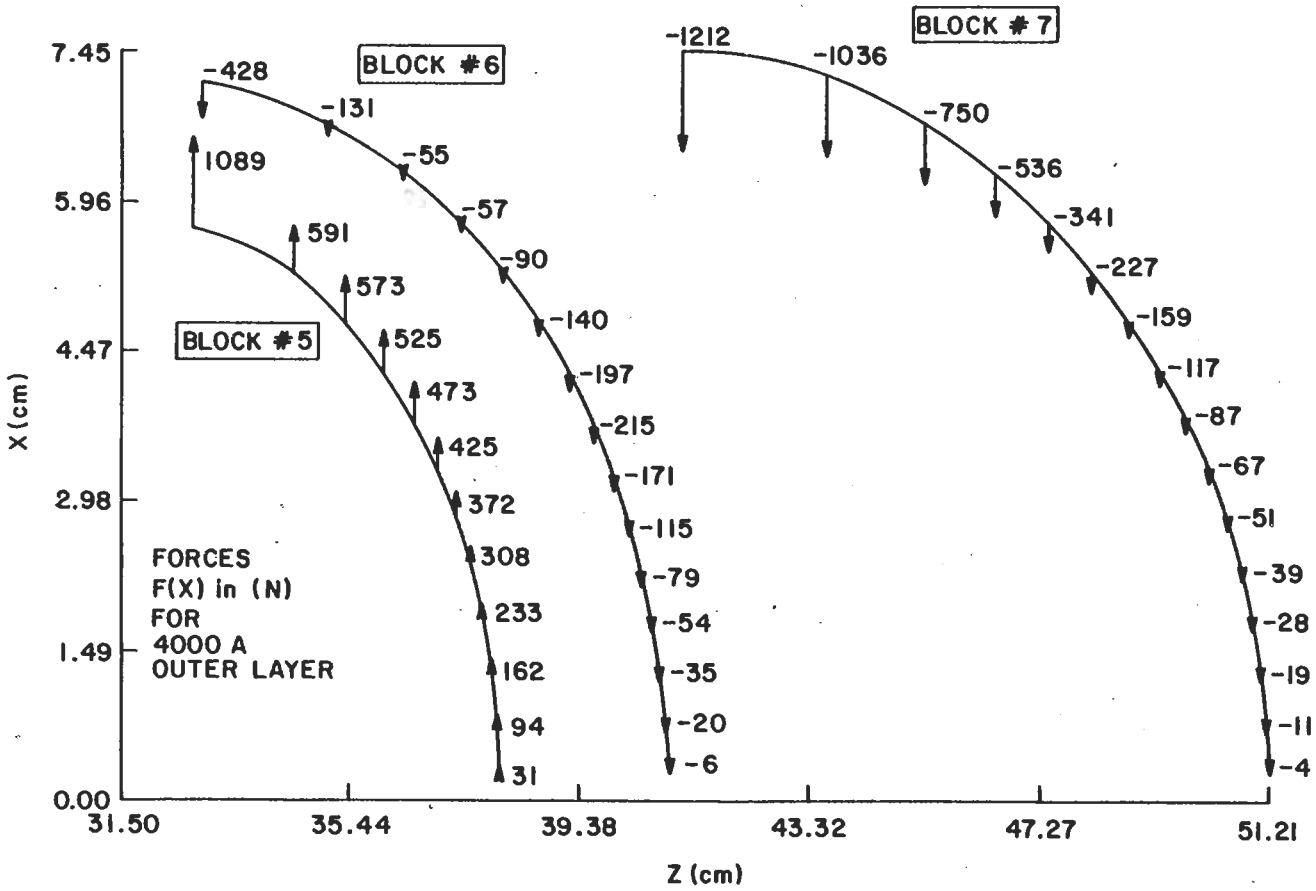

Figure 23: Force components F(X) in the outer layer. Coilends not enclosed in Iron. (present design).

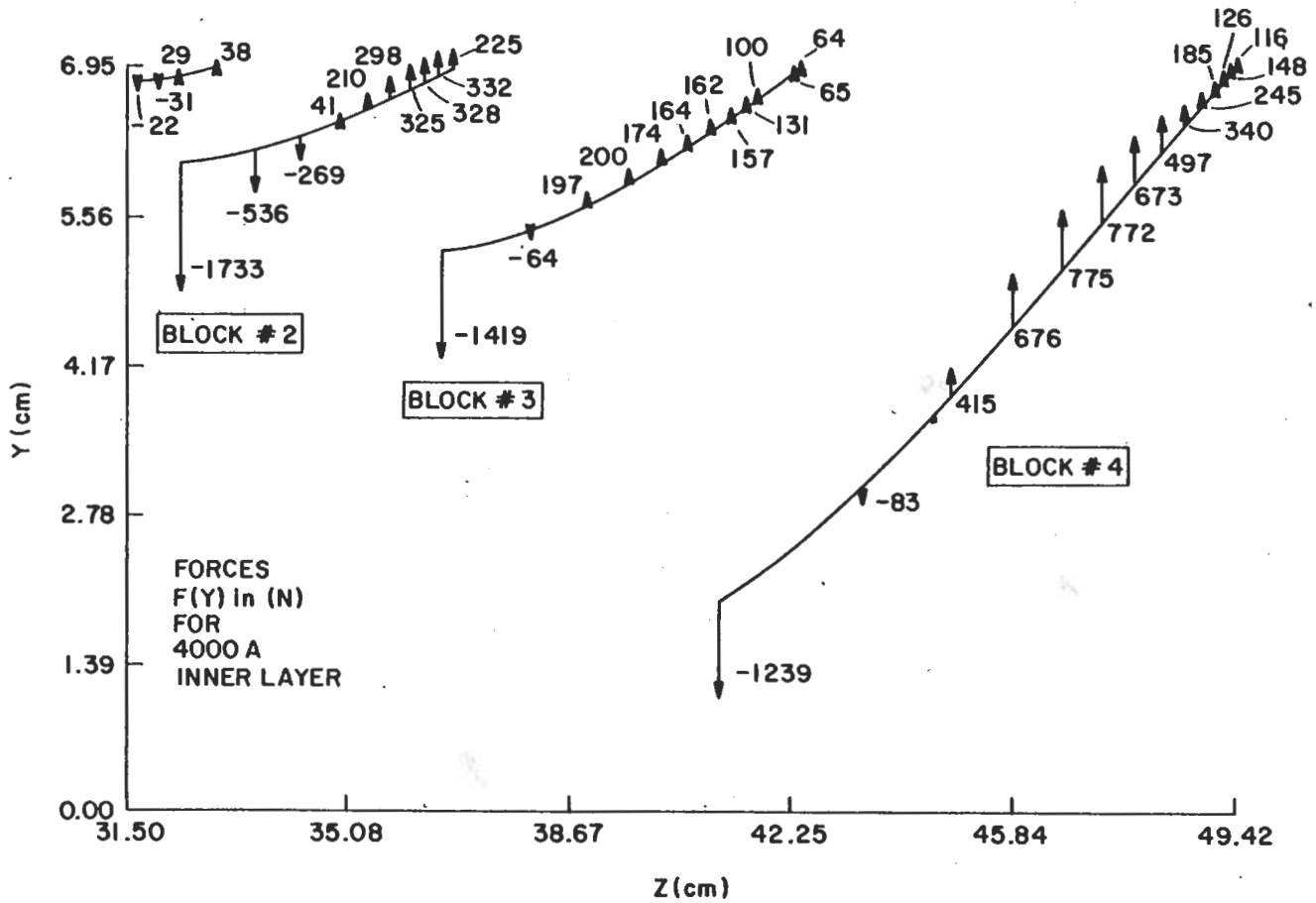

Figure 24: Force components F(Y) in the inner layer. Coil ends not enclosed in Iron (present design).

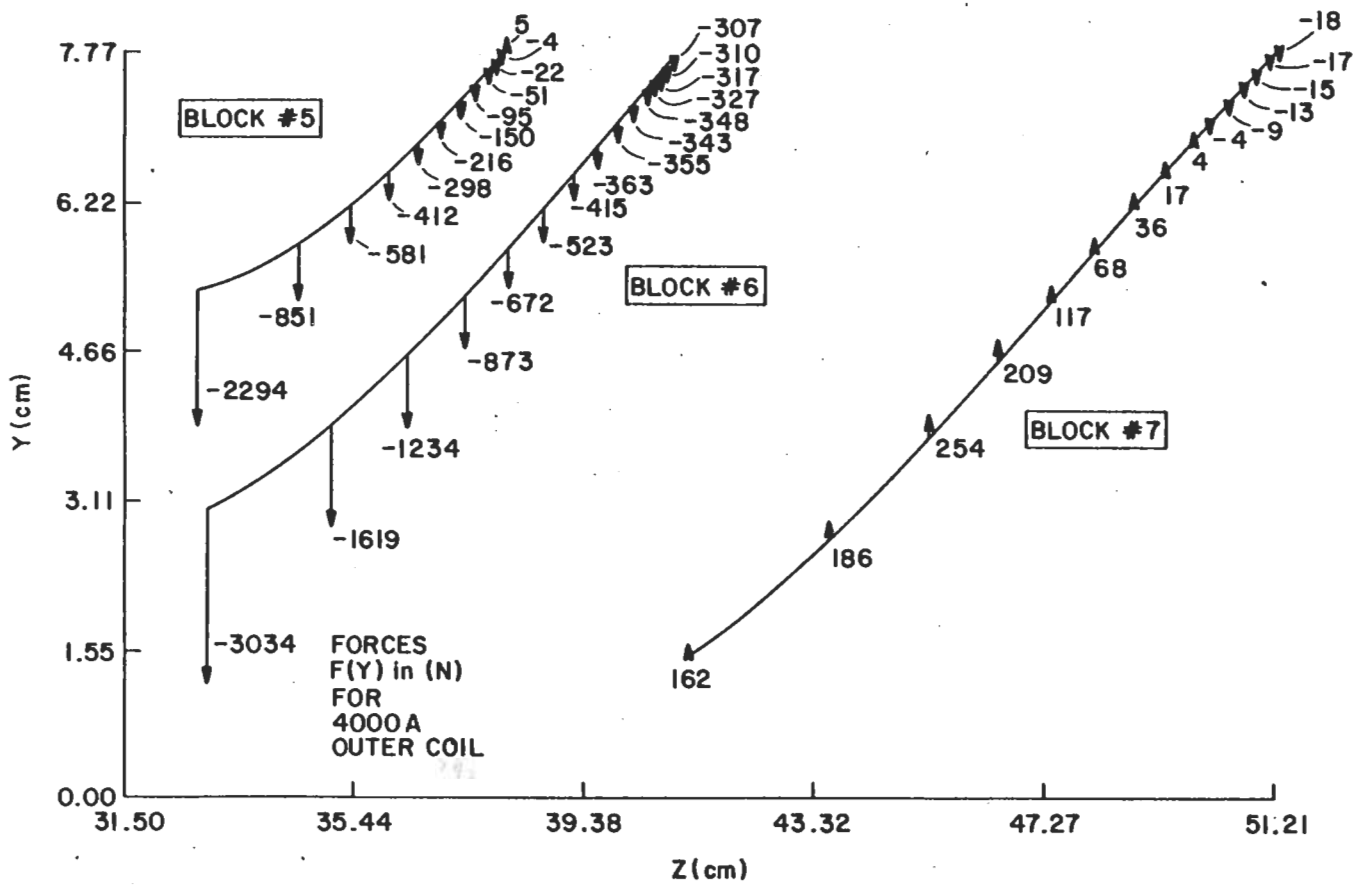

Figure 25: Force components F(Y) in the outer layer. Coil ends are not enclosed in iron. (present design).

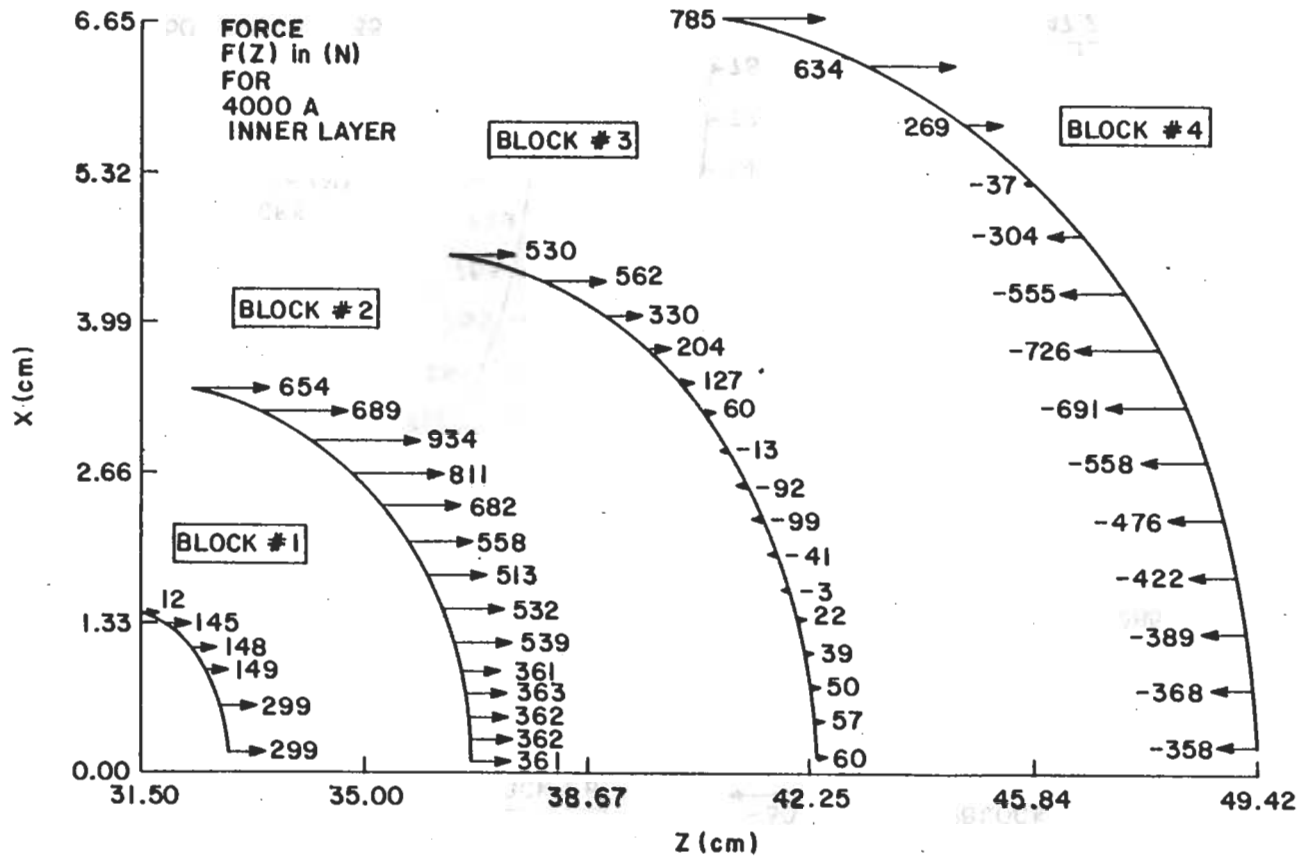

Figure 26: Force components F(Z) acting on conductor blocks of the inner layer. Coil ends are not enclosed by iron lamination. The coil straight section extends 2 cm beyond the iron lamination (present design).

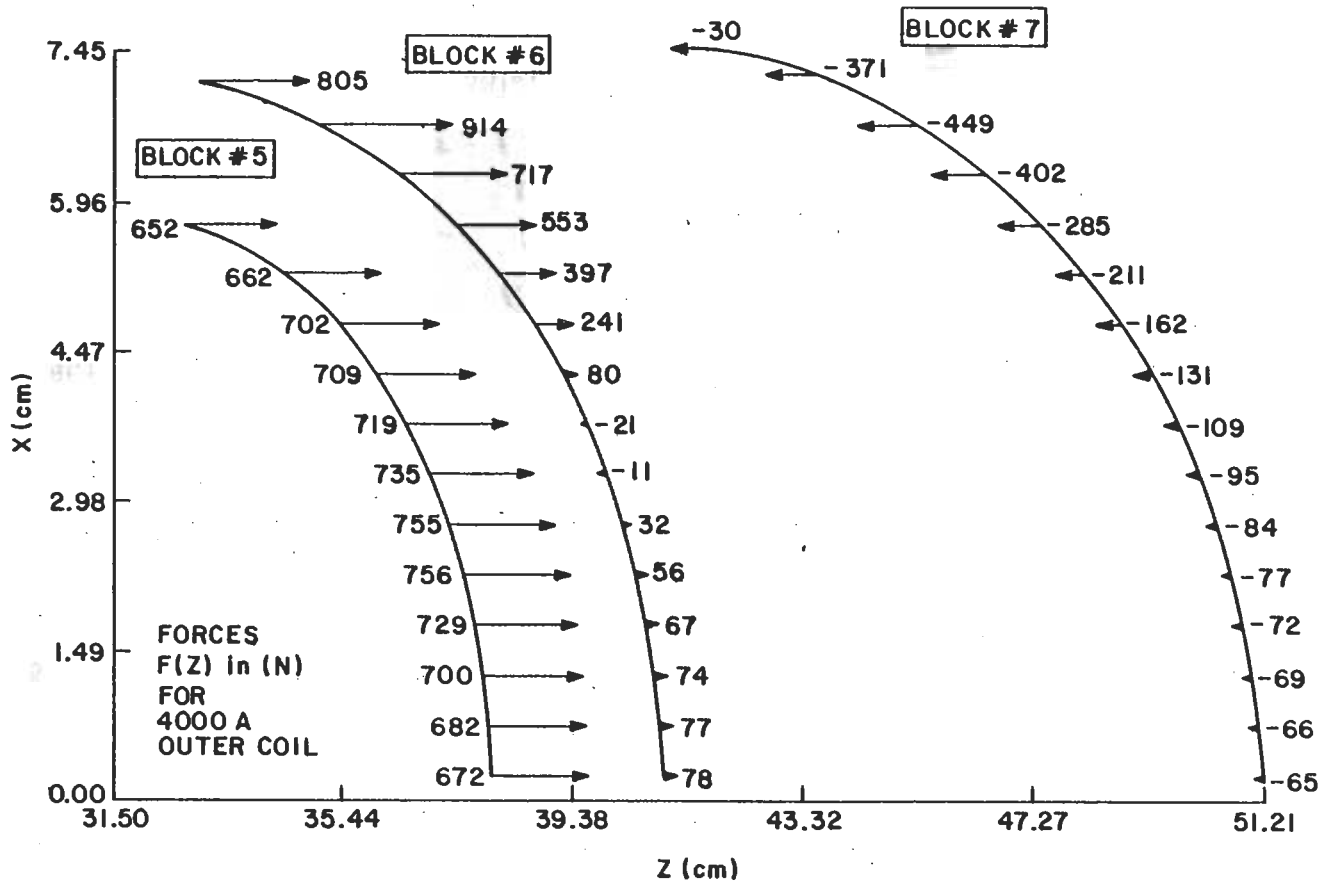

Figure 27: Force components F(Z) acting on conductor blocks of the inner layer. Coil ends are not enclosed by iron lamination. The coil straight section extends 2 cm beyond the iron lamination (present design).

VII. ACKNOWLEDGEMENT

During the course of developing and working on this paper, a number of people from ISABELLE, AGS, and the Applied Mathematics Department have actively helped and supported this work. Specifically, we would like to mention the stimulating discussions with R. Shutt and the great effort of John Dabrowski (AGS). We would like to express our gratitude to all who helped and have been sympathetic to this work.

REFERENCES

1. C.D. Stewart, Magnet design programs. The two and three-dimensional versions can be obtained from BNL computational center.

2. W. Trowbridge, Tosca. The computer program has been acquired from RHEL by a commercial company (Computa?) and can be obtained through Argonne National Lab.

3. R.C. Fernow, Field Computation No. 1, February 25, 1982.

4. R.C. Fernow, ISABELLE Technical Note No. 332, 1981.

5. H. Hahn, ISABELLE Technical Note No. 353, 1982.

6. H. Kirk, private communication.

7. W. Sampson, private communication.

8. A. Greene, private communication.

9. H. Brechna, J.W. Jackson, ISABELLE Technical Note No. 384, 1982.

10. H. Brechna, Technical Note 221, 1980.

Bldg. 911
AD Library
D. Lazarus
D. Lowenstein
P. Hughes (1) plus
one for each author(s) file
J.R. Sanford
D.H. White
E. Jablonski

Bldg. 130
G. Bozoki

Bldg. 460
N.P. Samios

Bldg. 902
M.Q. Barton
H. Foelsche
H. Hahn
H.J. Halama
R.I. Louttit
R.B. Palmer
E.P. Rohrer
J. Spiro
R.P. Shutt
P. Tuttle

Bldg. 725
L. Blumberg for
NSLS Library

Bldg. 510
H. Gordon
T.F. Kycia
L. Leipuner
S. Lindenbaum
S. Ozaki
S. Protopopescu
M. Sakitt
T.L. Trueman

W.R. Casey, 535A
D.G. Dimmler, 535

R.R. Rau - MIT
c/o S.C.C. Ting

Distribution: All Magnet Division Scientific and Professional Personnel (55).

/pmb