Field Calculations for Ring Cooler

Steve Kahn

10 April 2001

Preliminary Specifications

- The preliminary parameters of the bending magnet as provided:
  - Bending Radius R_{bend} =42 cm (needs to be revised)
  - Bending Angle $\Theta_{bend} = 45^{\circ}$
  - Dipose Field Strength B = 2.52 T (will be revised to 1.8 T)
  - Solenoid Field Strength B=3.5 T (will be revised to 2.5 T)
  - Normalized Field Gradient:
    - $dB_y/dx \times (R/B_o) = -0.5$

$$\frac{dB}{dr}\frac{r}{B} = -0.5$$

    - This is the weak focusing condition that produces local cylindrical symmetry around reference axis.
  - Radius of aperture $R_{aperture}$ = 15 cm.

Sketch of Dipole Magnet

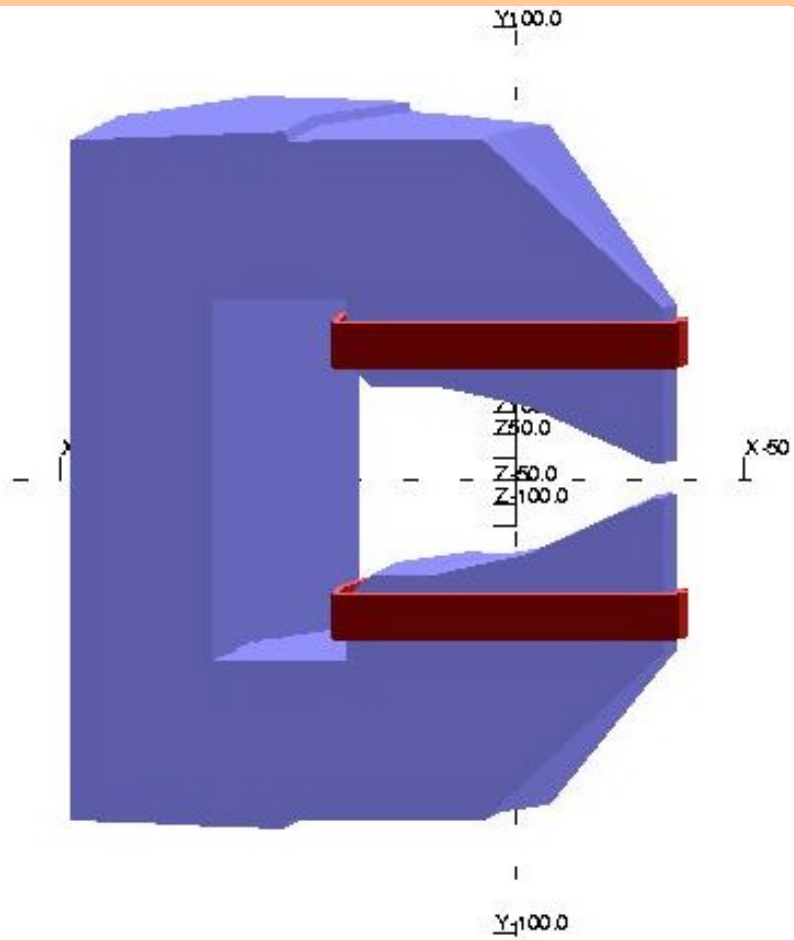

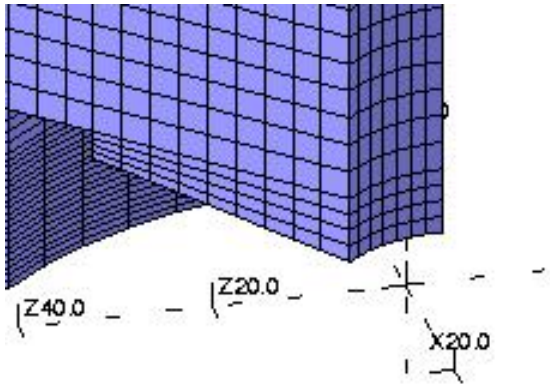

Pole face is shaped to achieve required gradient

The design of the wedge magnet is from P. Schwant

(dated 30 Jan 01)

Tosca Model for Wedge Dipole

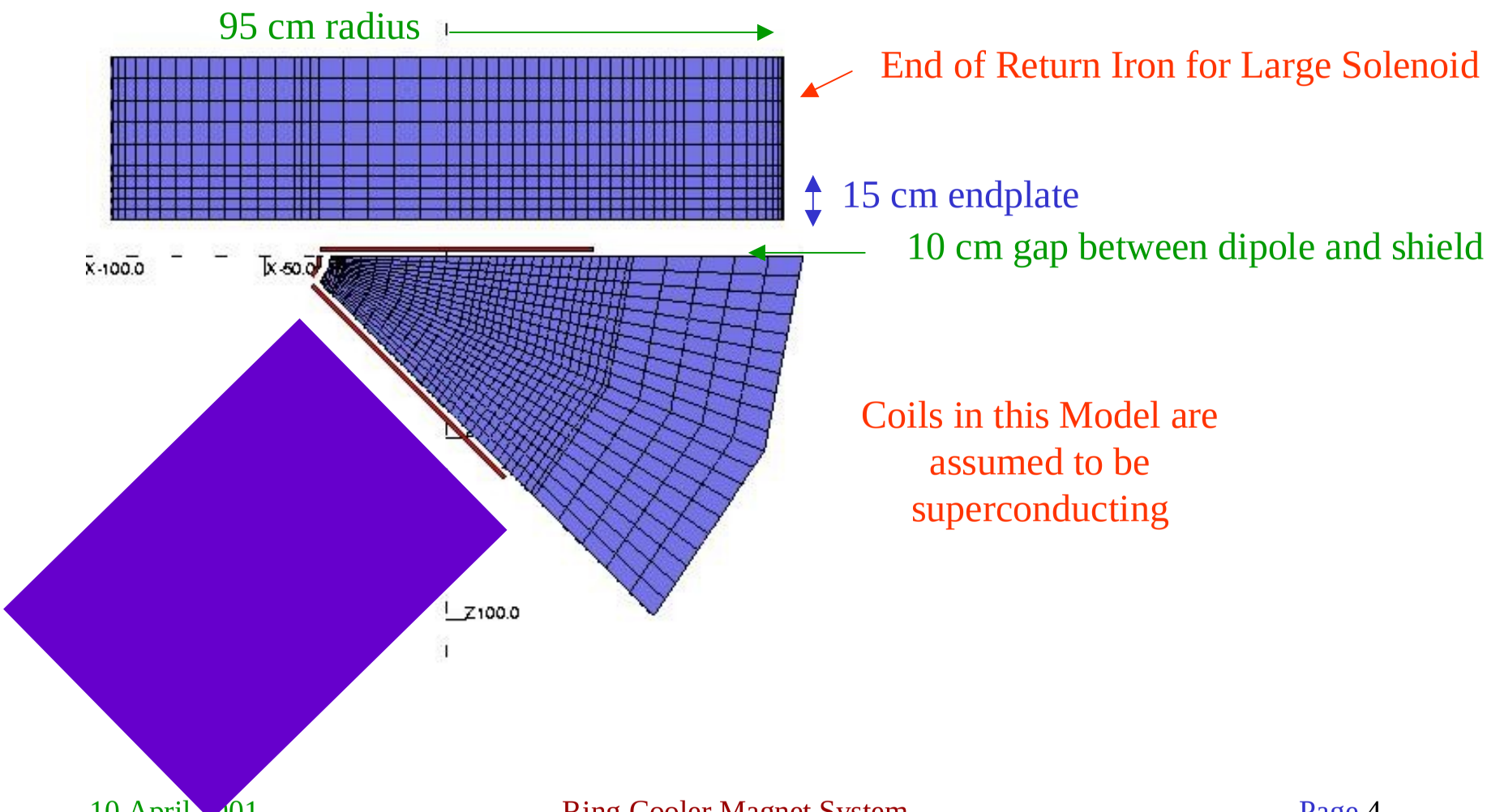

Permeability of Dipole

μ contours

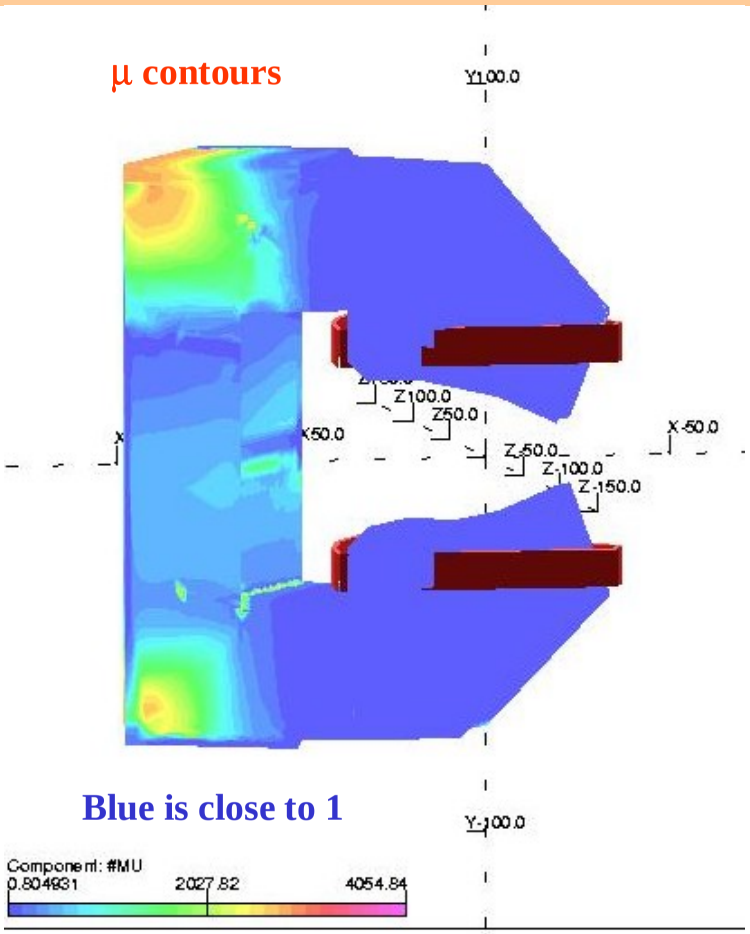

Blue is close to 1

$\log_{10}(\mu)$

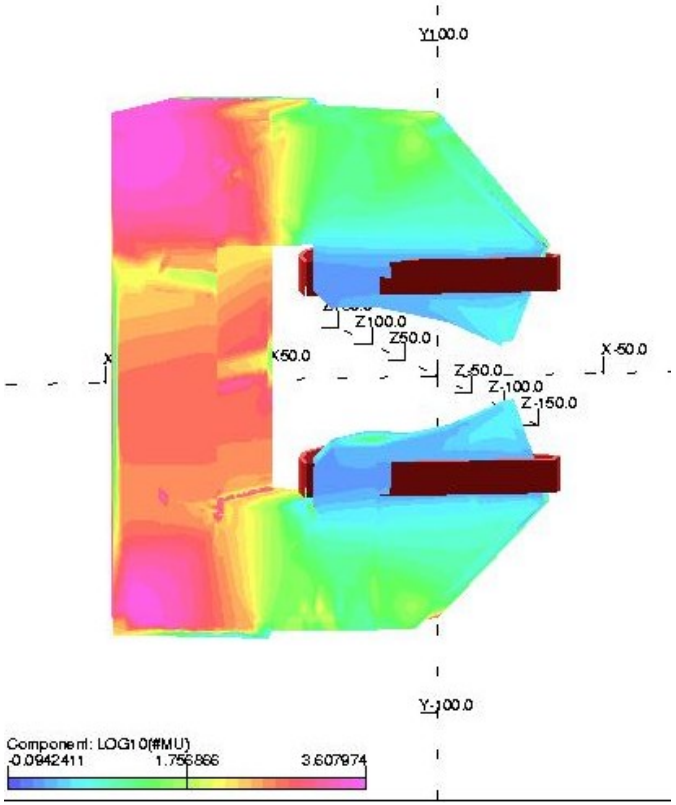

B_y along Beam Path in Wedge Magnet

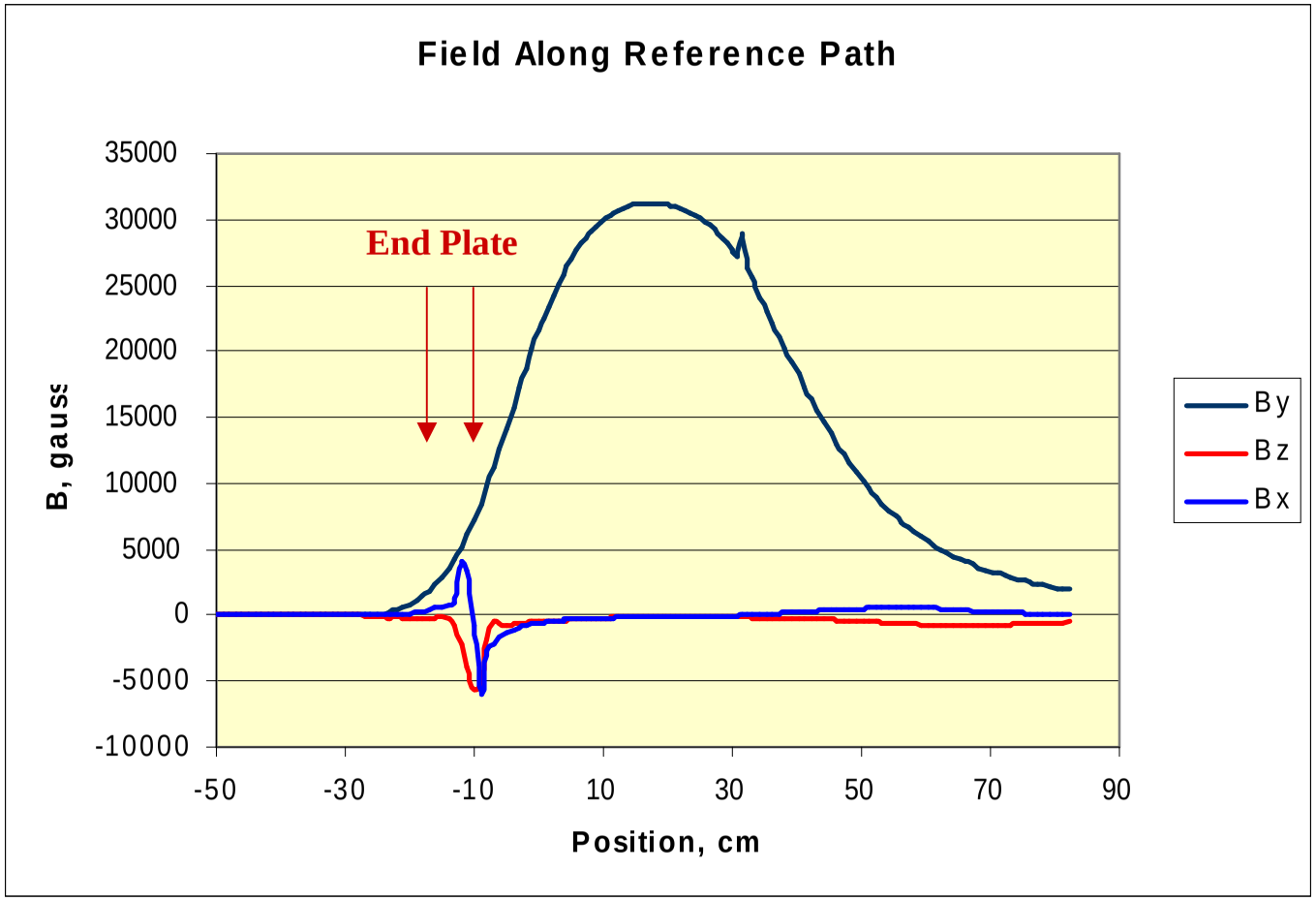

Field along the Vertical Symmetry Plane of the Wedge Dipole

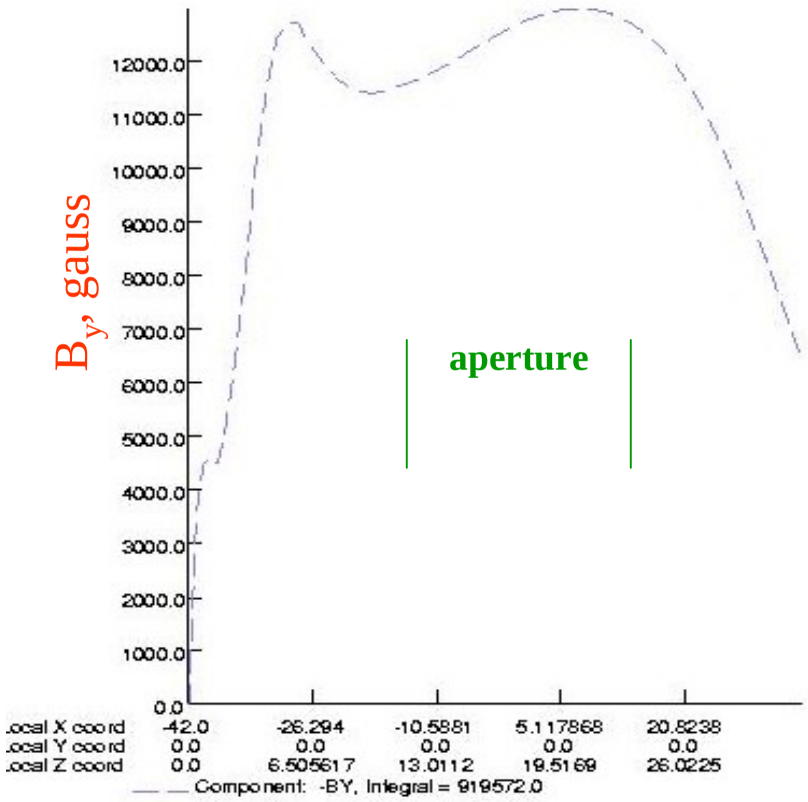

16 33 47 63

- **Desired gradient is not achieved with current design**
  - **Over saturated iron at poles makes pole shaping ineffective**
- **Needs to be redesigned. Probably with larger beam radius**

Large Solenoid Magnet

- Figure shows coils with 15 cm radius *inside* RF cavities.
  - Such coils would consist of short coils that would sit in the *nose* of the cavities.
- Coils could be placed outside the cavity instead. It is simple to calculate the field for that also.
  - The large coils are likely to be quite expensive.
- There is a 15 cm endplate with a 2.5 cm thick cylinder to return the flux.

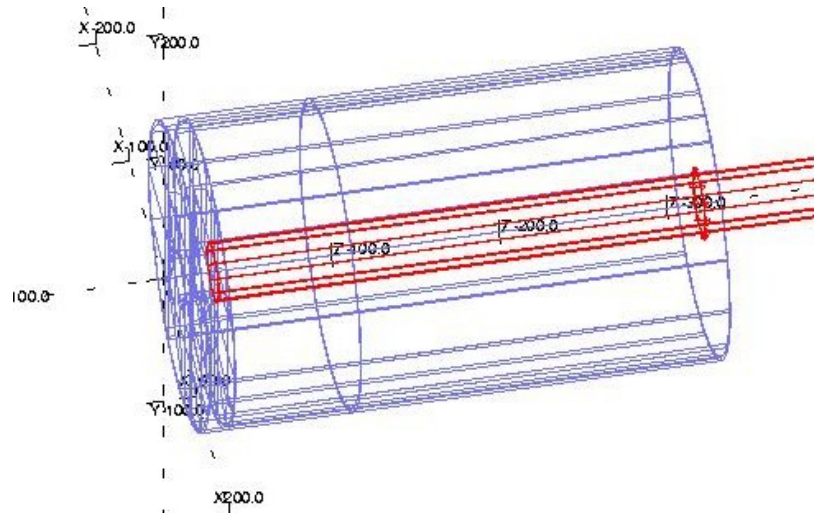

•Solenoid calculation uses BH table for Low Carbon 1010 steel.

Fields in Large Solenoid

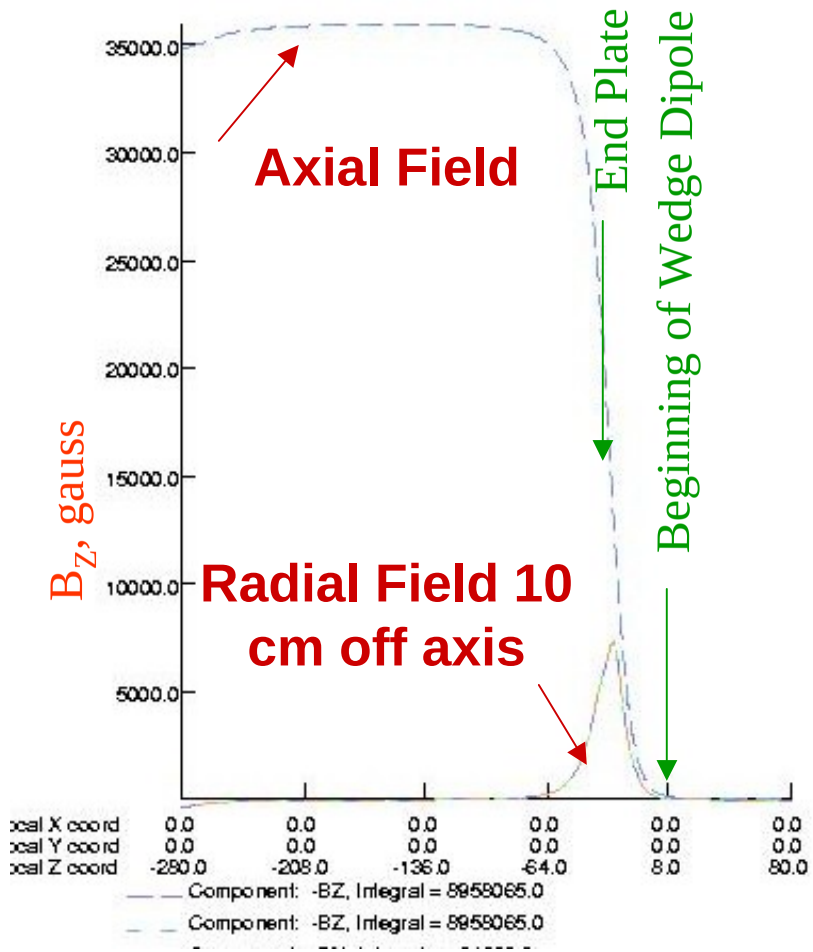

- **Note: Coils are inside cavity R_c=18 cm.**

- Run with coils outside RF cavities failed and is being recalculated.

Field in Short Field Flip Solenoid

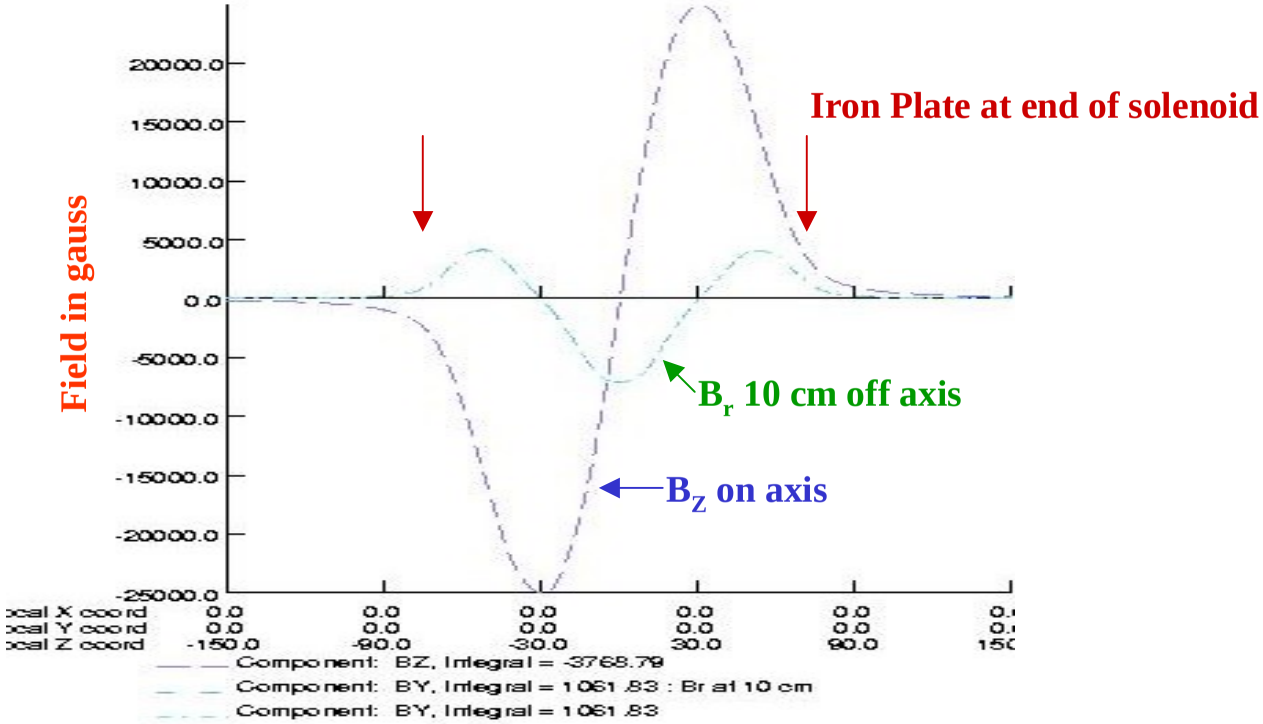

Field Maps

- The **TOSCA** program can generate 3D field grids.
- I have generated a 3D grid in the vicinity of the Dipole Magnet with 2 cm×2 cm×2cm segmentation:
  - Center of Wedge Dipole
    - Local coordinate system tilted 45º
  - Tail of Dipole in Large Solenoid
  - Tail of Dipole in Small Solenoid
- I have generated 2D grids for the solenoid fields with 1 cm × 1 cm in Δz, Δr. These maps are in the same format used by the current **gufld.**
  - Large Solenoid
  - Small Solenoid
- The **gufld** (or **guefld**) subroutine in GEANT will have to keep track of which octant it is in, which grid it should use and what signs to apply to the field for each point in space.
  - This has not yet been done.
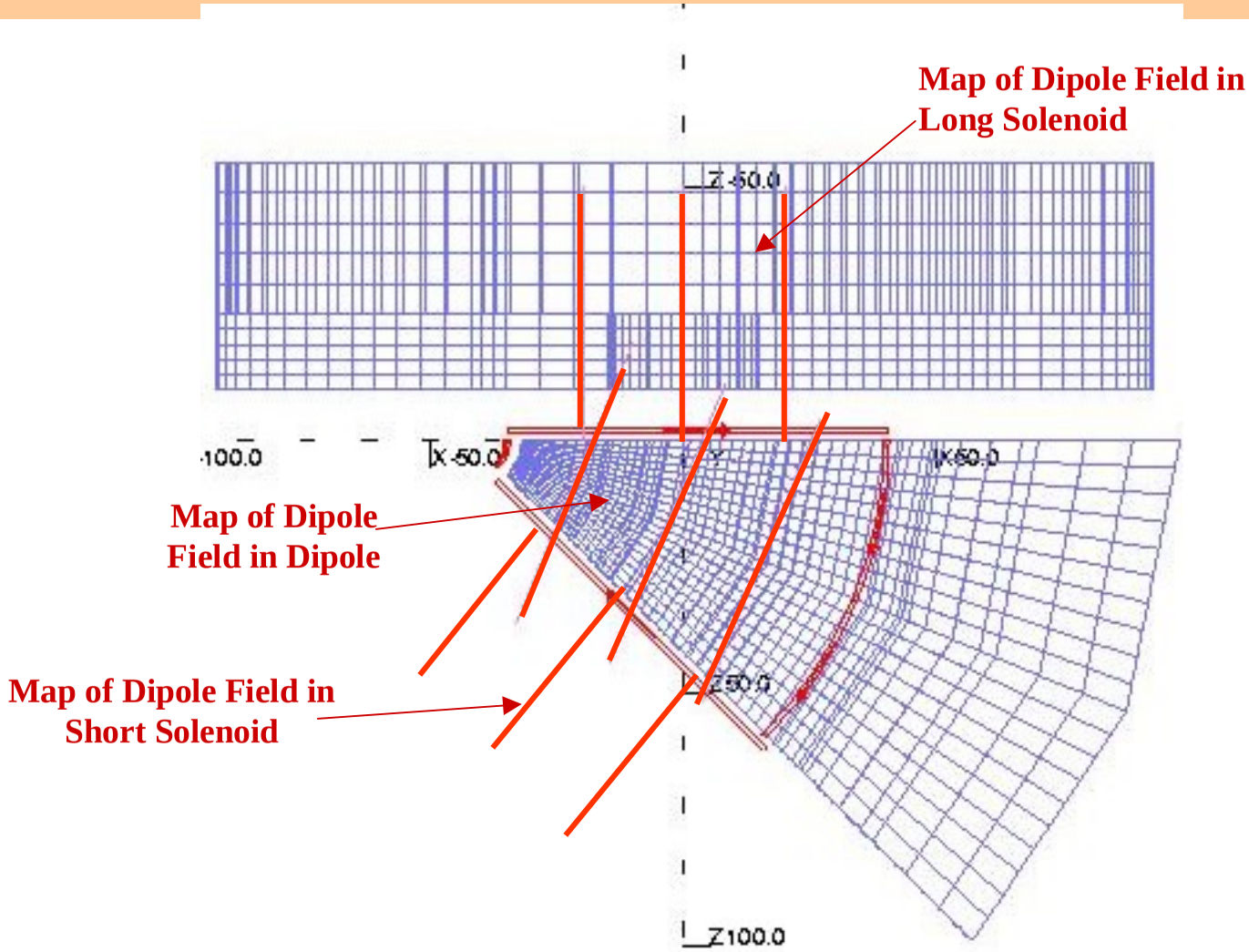
Dipole Magnet Maps