Centrifugal Pump for a 20-m/s, 1-cm-Diameter Mercury Jet

Ernst de Haas, Kirk T. McDonald
Joseph Henry Laboratories, Princeton University, Princeton, NJ 08544
(June 1, 2003)

A free mercury jet is a leading candidate for the pion-production target in a high-power proton beam at the front end of a Neutrino Factory,[1] The mercury jet should be about 1 cm in diameter, with a velocity of 15-20 m/s (so that it is reasonably straight when overlapping with a horizontal proton beam for ≈ 60 cm).

Here we consider parameters of the pump needed to propel a 1-cm-diameter jet of mercury at 20 m/s.

The volumeflow rate of mercury in the jet is

$$\begin{aligned} \text{Flow Rate} = vA = 2000 \text{ cm/s} \cdot \frac{\pi}{4} 1^2 = 1571 \text{ cm}^3/\text{s} &= 1.57 \text{ l/s} = 0.412 \text{ gallon/s} \\ &= 94.2 \text{ l/min} = 24.7 \text{ gpm}. \end{aligned} \tag{1}$$

The power in the jet (associated with its kinetic energy) is

$$\text{Power} = \frac{1}{2}\rho \cdot \text{Flow Rate} \cdot v^2 = \frac{13.6 \times 10^3}{2} \cdot 0.00157 \cdot (20)^2 = 4270 \text{ W} = 5.73 \text{ hp}. \tag{2}$$

To produce the 20-m/s jet into air/vacuum out of a nozzle requires a pressure

$$\text{Pressure} = \frac{1}{2}\rho v^2 = 27.2 \text{ atm} = 410 \text{ psi}. \tag{3}$$

After a search for mercury-compatible commercial pumps that could exceed the above requirements, we purchased 4000 Series, Model D-DH2(AA) centrifugal pump from R.S. Corcoran, powered by a 20-hp, 480 V motor from Baldor. A photograph of this pump is given below, followed by various spec sheets from the vendors.

[1] S. Ozaki *et al.*, *Feasibility Study II of a Muon-Based Neutrino Source* (June 14, 2001), http://www.cap.bnl.gov/mumu/studyii/FS2-report.html

R.S. CORCORAN Co.

MANUFACTURERS: • CORROSION-RESISTANT CENTRIFUGAL PUMPS
• EXOTIC ALLOYED CHEMICAL PUMPS

500 NORTH VINE STREET
P.O. BOX 429
NEW LENOX, IL 60451-0429

PHONE (815)-485-2156
TOLL FREE 1-(800)-637-1067
FAX (815)-485-5840

www.corcoranpumps.com • email: corcorpump@earthlink.net

PUMP QUOTATION

Date: APRIL 17, 2003

RSCQ #: J03041704

Attention: E. DE HAAS

c/o: PRINCETON UNIVERSITY

Pumping Application 25 GPM at 71 FT TH: (1.56 L/S @ 420 PSI)

Hg

SOLUTION OF MERCURY, TEMP. 20-80°C, SPEC. GRAVITY 13.6

Pump **4000** **Series, Model:** **D-HD2 (AA)**

Description: CLOSE-COUPLED, HEAVY-DUTY DESIGN, CENTRIFUGAL

Mat'l of Const. (All wetted parts): STAINLESS STEEL

Suction: 1 1/2" RF FLANGE (150#) Discharge: 1" RF FLANGE (300#)

Mechanical Seal: Type 6006-8B1-40V Size 2.125

Rotating face CARBON (BALANCED) Elastomer VITON

Stationary face SILICON CARBIDE Metal parts 316 S/S

Motor: 20 HP 1765 RPM 480 Volts AC 3 Ph 60 HZ

TEFC - PREM. EFFICIENT Enclosure 1.15 SF 256TC Frame

Quantity: 1 **Unit Net Cost: $ 4952**

Shipping: 3-4 WEEKS FOB: FACTORY Approx. Shipping Wt.: 375 LBS.

Notes:
1. REFERENCE CURVE NO. 4-1501-17.
2. REFERENCE BASIC DIMENSIONAL DRAWING.
3. REFERENCE MOTOR DATA.
4. RECOMMEND SLOW START USING VFD CONTROLLER (NOT SUPPLIED BY CORCORAN).
5. **OPTION**: VFD MOTOR, 5000 RPM MAX., **NET PRICE ADDER = $572.**

Joel Kramer

R.S.
CORCORAN Co.
500 NORTH VINE STREET
P.O. BOX 429
NEW LENOX, IL 60451-0429

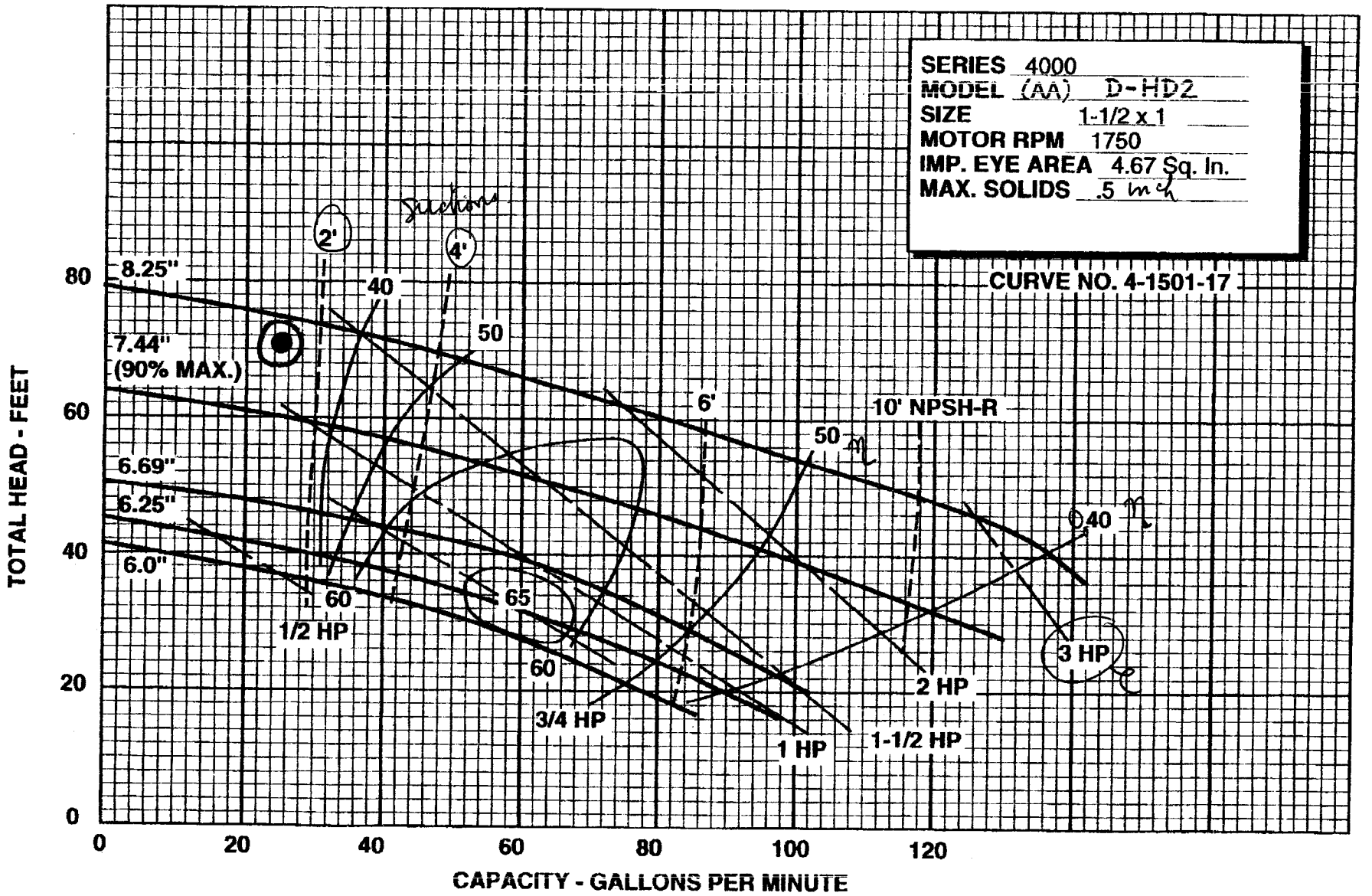

MODEL 4000D
~~MODEL 4000DH (Double Sealed)~~
FLANGED PORTS

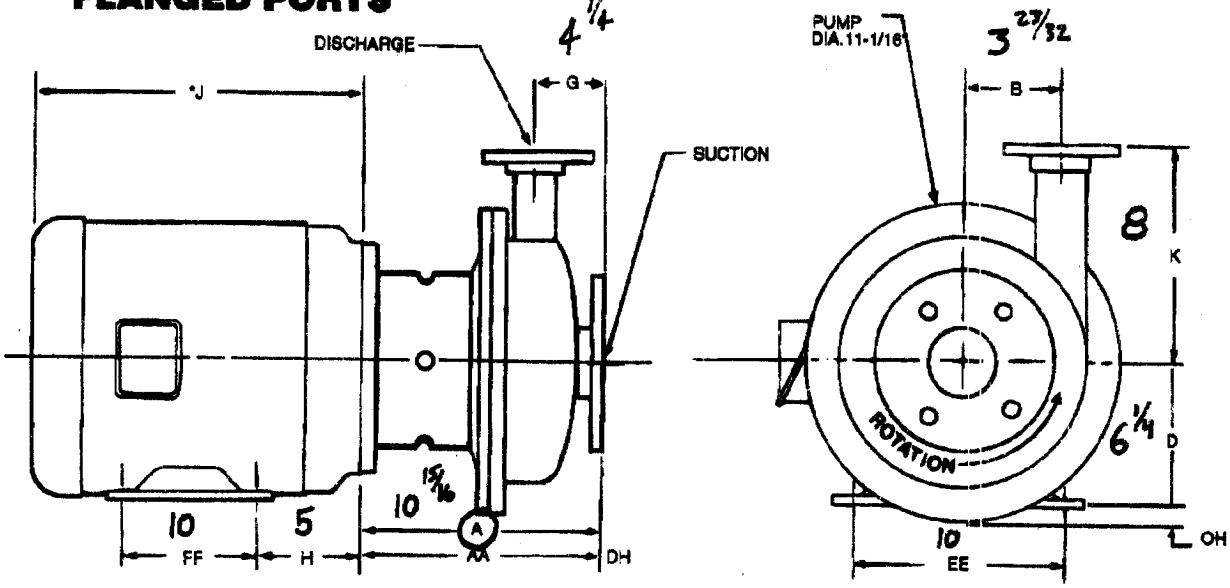

DIMENSIONS OF MODEL 4000D/4000DH FLANGED PORTS

For planning purposes only. Do not use for construction unless certified.
****For Motor Dimensions J see Motor Dimensions Table***

MOTOR FRAME SIZE	D	EE	FF	PORTS	"D" "DH" 4000 SERIES FL A	AA	B	G	H	K	OH
143TC	3½	5¼	4	1¼x(½)1	9 9/16	10 1/16	3 11/16	4¼	2⅞	6	2⅛
				1½x1	9 9/16	10 1/16	3 9/16	4¼	2⅞	6	2⅛
				2x1½	9 9/16	10 1/16	3⅞	4¼	2⅞	6	2⅛
145TC			5	3x1½	9 9/16	10 1/16	3⅞	4¼	2⅞	6	2⅛
				3x2	9 9/16	10 1/16	3⅞	4¼	2⅞	6	2⅛
				4x3	10½	11½	2⅞	4⅞	2⅞	6	2⅛
182TC	4½	7½	4½	1½x(½)1	9 9/16	11 9/16	3 15/16	4¼	3⅝	6	1⅛
				1½x1	9 9/16	11 9/16	3 9/16	4¼	3⅝	6	1⅛
				2x1½	9 9/16	11 9/16	3⅞	4¼	3⅝	6	1⅛
184TC			5½	3x1½	9 9/16	11 9/16	3⅞	4¼	3⅝	6	1⅛
				3x2	9 9/16	11 9/16	3⅞	4¼	3⅝	6	1⅛
				4x3	10⅝	12⅝	2⅞	4⅞	3⅝	6	1⅛
213TC	5¼	8½	5½	1½x(½)1	9 9/16	11½	3 11/16	4¼	4½	6	⅛
				1½x1	9 9/16	11½	3 9/16	4¼	4½	6	⅛
				2x1½	9 9/16	11½	3⅞	4¼	4½	6	⅛
215TC			7	3x1½	9 9/16	11½	3⅞	4¼	4½	6	⅛
				3x2	9 9/16	11½	3⅞	4¼	4½	6	⅛
				4x3	11	12 1/16	2⅞	4⅞	4½	6	⅛
254TC	6¼		8½	1½x(½)1	10 1/16	12 1/16	3 11/16	4¼	5	6	
				1½x1	10 1/16	~~12 1/16~~	3 9/16	4¼	5	6	
				2x1½	10 1/16	12 1/16	3⅞	4¼	5	6	
256TC			10	3x1½	10 1/16	12 1/16	3⅞	4¼	5	6	
				3x2	10 1/16	12 1/16	3⅞	4¼	5	6	
				4x3	12⅛	13¼	2⅞	4⅞	5	6	
284TC	7	11	9½	1½x(½)1	11 1/16	12 1/16	3 11/16	4¼	5	6	
				1½x1	11 1/16	12 1/16	3 9/16	4¼	5	6	
				2x1½	11 1/16	12 1/16	3⅞	4¼	5	6	
286TC			11	3x1½	11 1/16	12 1/16	3⅞	4¼	5	6	
				3x2	11 1/16	12 1/16	3⅞	4¼	5	6	
				4x3	12⅝	13⅝	2⅞	4⅞	5	6	

MOTOR FRAME SIZE	D	EE	FF	PORTS	"D" "DH" 4000 SERIES FL A	AA	B	G	H	K
284TSC	7	11	9½	1½x(½)1	10 9/16	12	3 11/16	4¼	5	6
				1½x1	10 9/16	12	3 9/16	4¼	5	6
				2x1½	10 9/16	12	3⅞	4¼	5	6
286TSC			11	3x1½	10 9/16	12	3⅞	4¼	5	6
				3x2	10 9/16	12	3⅞	4¼	5	6
				4x3	11	13 9/16	2⅞	4⅞	5	6
324TC	8	12½	10½	1½x(½)1	11 9/16	12 1/16	3 11/16	4¼	5½	6
				1½x1	11 9/16	12 1/16	3 9/16	4¼	5½	6
				2x1½	11 9/16	12 1/16	3⅞	4¼	5½	6
326TC			12	3x1½	11 9/16	12 1/16	3⅞	4¼	5½	6
				3x2	11 9/16	12 1/16	3⅞	4¼	5½	6
				4x3	13	13⅝	2⅞	4⅞	5½	6
324TSC	8	12½	10½	1½x(½)1	11 9/16	12 1/16	3 11/16	4¼	5½	6
				1½x1	11 9/16	12 1/16	3 9/16	4¼	5½	6
				2x1½	11 9/16	12 1/16	3⅞	4¼	5½	6
326TSC			12	3x1½	11 9/16	12 1/16	3⅞	4¼	5½	6
				3x2	11 9/16	12 1/16	3⅞	4¼	5½	6
				4x3	11⅝	13½	2⅞	4⅞	5½	6
364TC	9	14	11¼	1½x(½)1	13 11/16	13 1/16	3 11/16	4¼	6½	8
				1½x1	13 11/16	13 1/16	3 9/16	4¼	6½	8
				2x1½	13 11/16	13 1/16	3⅞	4¼	6½	8
365TC			12½	3x1½	13 11/16	13 1/16	3⅞	4¼	6½	8
				3x2	13 11/16	13 1/16	3⅞	4¼	6½	8
				4x3	14⅝	14¼	2⅞	4⅞	6½	8
364TSC	9	14	11¼	1½x(½)1	11⅞	12 1/16	3 11/16	4¼	6½	8
				1½x1	11⅞	12 1/16	3 9/16	4¼	6½	8
				2x1½	11⅞	12 1/16	3⅞	4¼	6½	8
365TSC			12½	3x1½	11⅞	12 1/16	3⅞	4¼	6½	8
				3x2	11⅞	12 1/16	3⅞	4¼	6½	8
				4x3	11⅝	13½	2⅞	4⅞	6½	8

R.S. CORCORAN
500 N. Vine Street•New Lenox, IL 60451
Toll Free: 1-800-637-1067
Phone: 1-815-485-2156 Fax: 1-815-485-5840

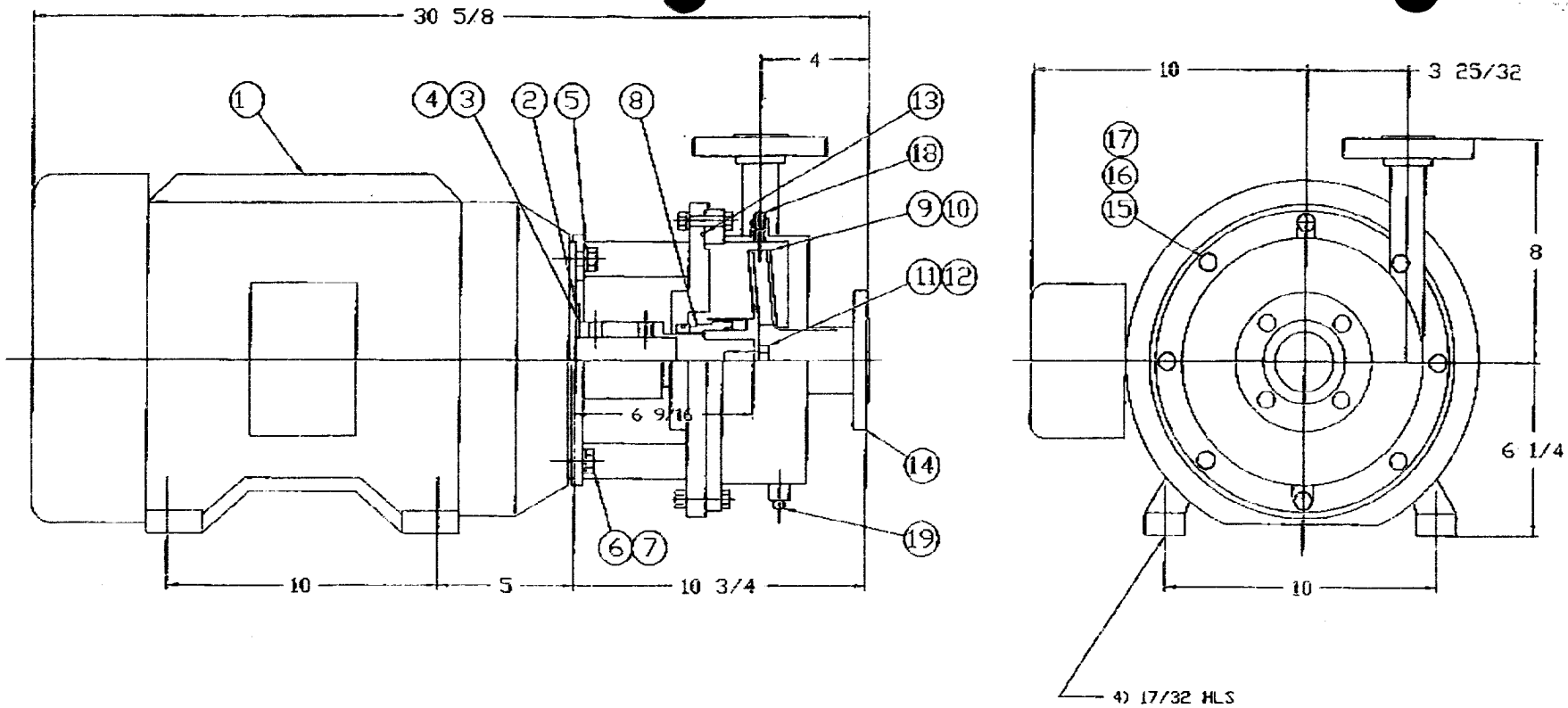

ITEM	QTY	DESCRIPTION	PART NO/ SIZE	MTL
19	1	PLUG	1/4 NPT	S/S
18	1	PLUG	1/8 NPT	S/S
17	8	NUT	3/8-16	S/S
16	8	LOCKWASHER	3/8	S/S
15	8	HEX HD CAP SCREW	3/8-16 X 2	S/S
14	1	HOUSING ASSEMBLY	18181	S/S
13	1	HOUSING GASKET	2-175	VIN
12	1	O-RING	2-017	TFE
11	1	HEX HD CAP SCREW	5/8-11 X 1 1/4	S/S
10	1	KEY	3/8 X 3/8	S/S
9	1	IMPELLER	9166-7.90	S/S
8	1	MECHANICAL SEAL	88-140V	
7	4	LOCKWASHER	1/2	S/S
6	4	HEX HD CAP SCREW	1/2-13 X 1 1/4	S/S
5	1	ADAPTOR	18178	S/S
4	6	SET SCREW	1/2-13 X 3/4	S/S
3	1	SHAFT SLEEVE	18179	S/S
2	1	SLINGER DISK	1 5/8 I.D.	TFE
1	1	MOTOR		

NOTES:

1. MOTOR: 20 HP 1765 RPM 230/460 VOLT
   3 PHASE 60 HZ TEFC ENCL PREM EFF. 256TC FRAME
2. HOUSING SIZE: SUCTION: 1 1/2 150 LB R.F. FL.
   DISCHARGE 1 300 LB R.F. FL.
3. IMPELLER DIAMETER: 7.90
4. MATERIAL OF CONSTRUCTION: STAINLESS STEEL
5. IMPELLER DUTY: 25 GPM @ 71 FT TH
6. CUSTOMER: PRINCETON UNIVERSITY
   W. O. NO: 41312 SERIAL NO: 4640

E:\D\DRAW\18182

TOLERANCES UNLESS SPECIFIED

R. S. CORCORAN Co.
NEW LENOX, IL 60451

TITLE 4000 D-HD2 (AA)
1 1/2 R.F. X 1 300 LB R.F.FL.

DATE 6/17/03

DWG. C-18182

Application Guide

Baldor Motors for use in Variable Frequency Applications

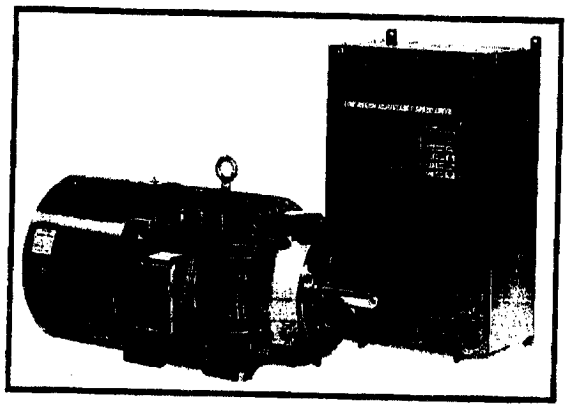

Inverter Drive® and Vector Drive® Motors

Baldor Inverter Drive® and Vector Drive® Motors exceed all requirements of NEMA MG-1 Parts 30 and 31 for AC induction motors powered from adjustable speed controls. Definite-Purpose Inverter-Fed Polyphase Motors. Inverter Drive Motors are suitable for variable torque applications and rated 1000:1 for constant torque (except for those Inverter Duty motors rated for use in hazardous locations). Vector Drive motors are capable of full, rated torque at 0 RPM, continuous duty. Satisfactory motor performance depends on proper drive setup.

Super-E®Motors

All Baldor Super-E Inverter-Ready motors meet NEMA MG-1 Part 31.4.4.2. Super-E motors are suitable for use with inverter drives in applications for variable torque and with a constant torque 20:1 speed range. Motor-inverter set up is unique to each specific application. Set up and correct wiring procedures must be closely followed.

Standard-E® Motors

Baldor Standard-E® EPAct efficient motors are suitable for use in variable frequency applications per NEMA MG-1 Part 30. With proper motor/inverter set up, Standard-E motors are suitable for use at 20:1 variable torque and 4:1 constant torque applications.

It is necessary that motor-drive applications are commissioned by technicians familiar with the operation and setup of adjustable speed drives, applicable electrical codes and regulations. Each drive must be tuned to the motor for the specific application. System operating parameters must be checked, including voltage at motor power leads, to insure that motor/drive set up has been successfully completed. Applications that are not properly set up can lead to substandard performance and failure of system components.

RATING - NOMINALS

Rated Output	20 HP
Volts	230/460
Full Load Amps	48/24
Speed	1765
Hertz	60
Phase	3
NEMA Design Code	B
LR KVA Code	H
Efficiency	93.0
Power Factor	84
Service Factor	1.15 ?
Rating -Duty	40C AMB-CONT

CHARACTERISTICS

Full Load Torque	59.5 LB-FT
Break Down Torque	199 LB-FT
Pull-Up Torque	104 LB-FT
Locked-Rotor Torque	116
Starting Current	175.1
No-Load Current	9.79
Line-line Resistance @ 25 degrees C	.416
Temperature Rise, in degrees C @ F.L.	64

LOAD CHARACTERISTICS - TESTED

% of Rated Load	25	50	75	100	125	150	S.F
Power Factor	47	70	79	84	86	86	85
Efficiency	89.0	92.6	93.3	93.0	92.4	91.3	92.7
Speed (rpm)	1792	1784	1775	1765	1755	1745	1759
Line Amperes	11.24	14.53	18.98	23.92	29.60	35.61	27.33

1.15
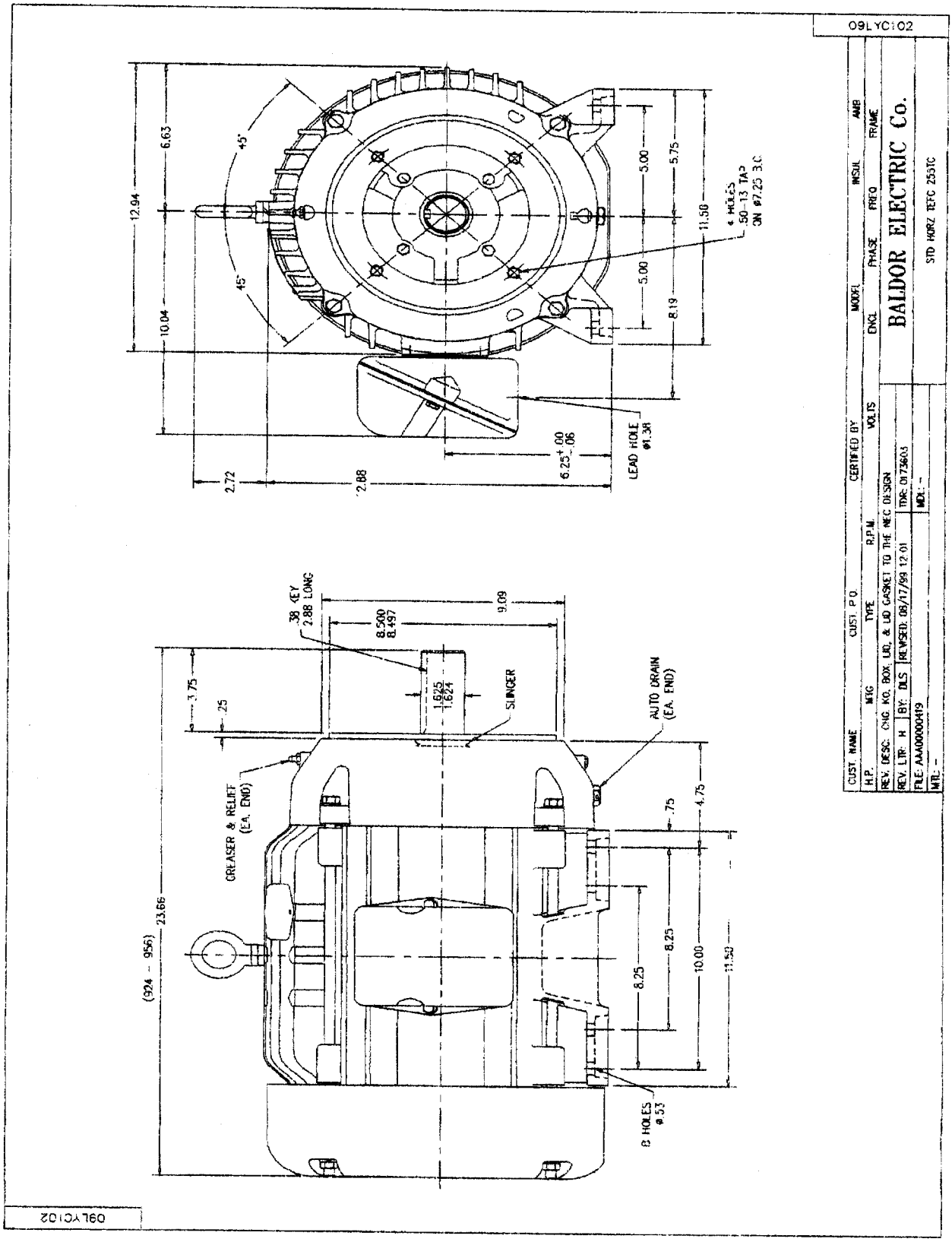
Catalog Number: CEM2334T Layout=09LYC102 Type=0948M C-Dimension=23.66