AGS E951

FY01 Run Plan

February-March-April, 2001

Our initial AGS running for FY01 will be confined to preliminary testing of various target materials and layouts to study the effects of beam-target configurations in the most extreme conditions that we can achieve. Ultimate goal is to study the effects of a 16 , 24 GeV proton beam on low and high-Z targets.

For this running period we plan for the following:

1. FEB commissioning into A3 area
2. Beam Window Tests without targets
3. Solid Carbon Targets
4. Liquid Mercury Targets

   Passive Hg trough
   Horizontal Hg jet

We show the layouts in the following set of diagrams:

Fig. 1 and 2: The A3 target end station

Fig. 3: The solid carbon target

Fig. 4: The Mercury Jet Primary Containment Vessel

Fig. 5,6 and 7: The mercury jet secondary containment vessel

Fig. 8: A passive Hg trough target

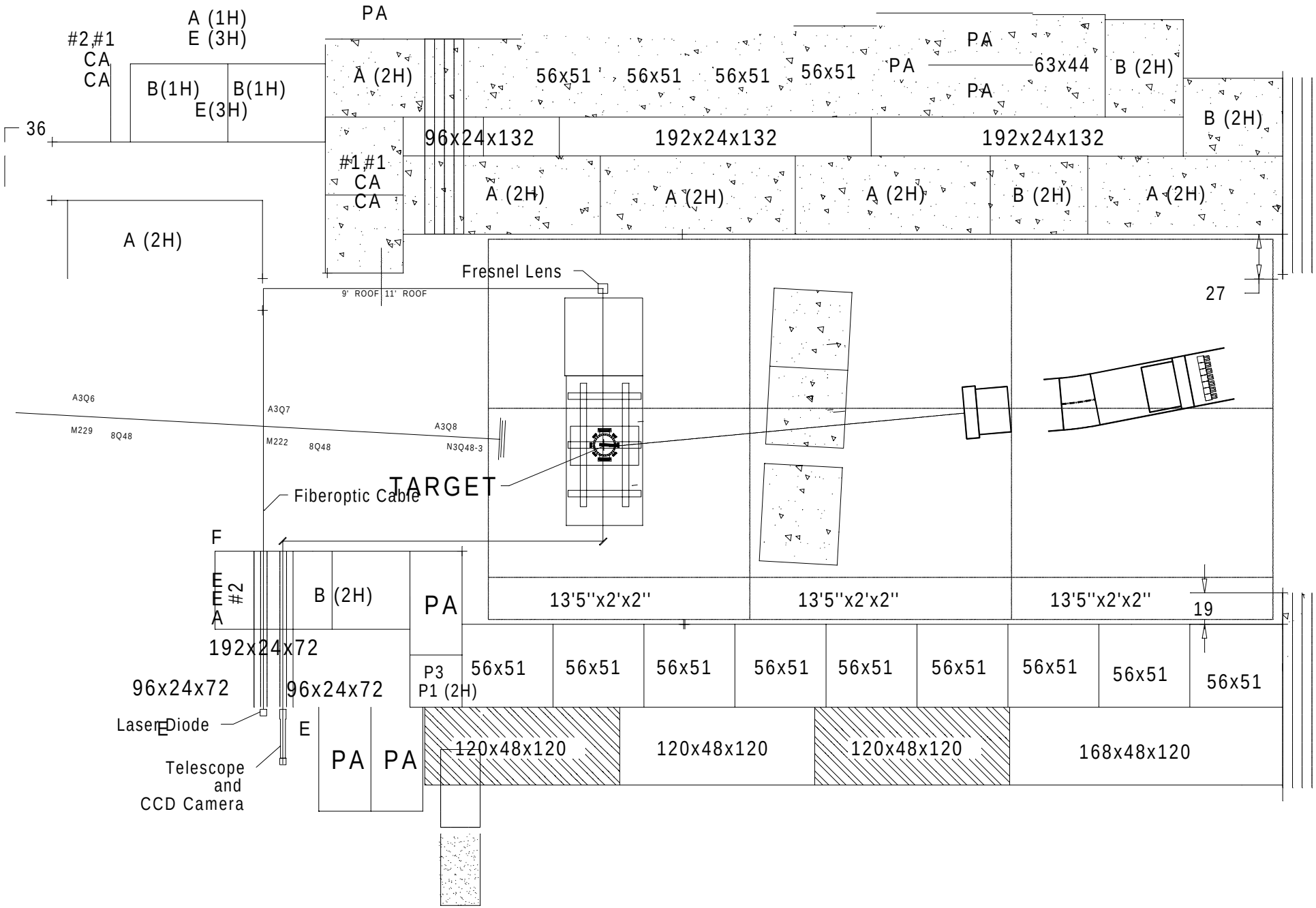
#2,#1
CA
CA
A (1H)
E (3H)
B(1H)
B(1H)
E(3H)
PA
A (2H)
56x51
56x51
56x51
56x51
PA
PA
PA
63x44
B (2H)
B (2H)
36
96x24x132
192x24x132
192x24x132
#1,#1
CA
CA
A (2H)
A (2H)
A (2H)
B (2H)
A (2H)
A (2H)
Fresnel Lens
9' ROOF
11' ROOF
27
A3Q6
A3Q7
A3Q8
M229
8Q48
M222
8Q48
N3Q48-3
TARGET
Fiberoptic Cable
F
E
E
E
A
#2
B (2H)
PA
13'5''x2'x2''
13'5''x2'x2''
13'5''x2'x2''
19
192x24x72
96x24x72
96x24x72
P3
P1 (2H)
56x51
56x51
56x51
56x51
56x51
56x51
56x51
56x51
56x51
Laser Diode
E
E
PA
PA
120x48x120
120x48x120
120x48x120
168x48x120
Telescope
and
CCD Camera

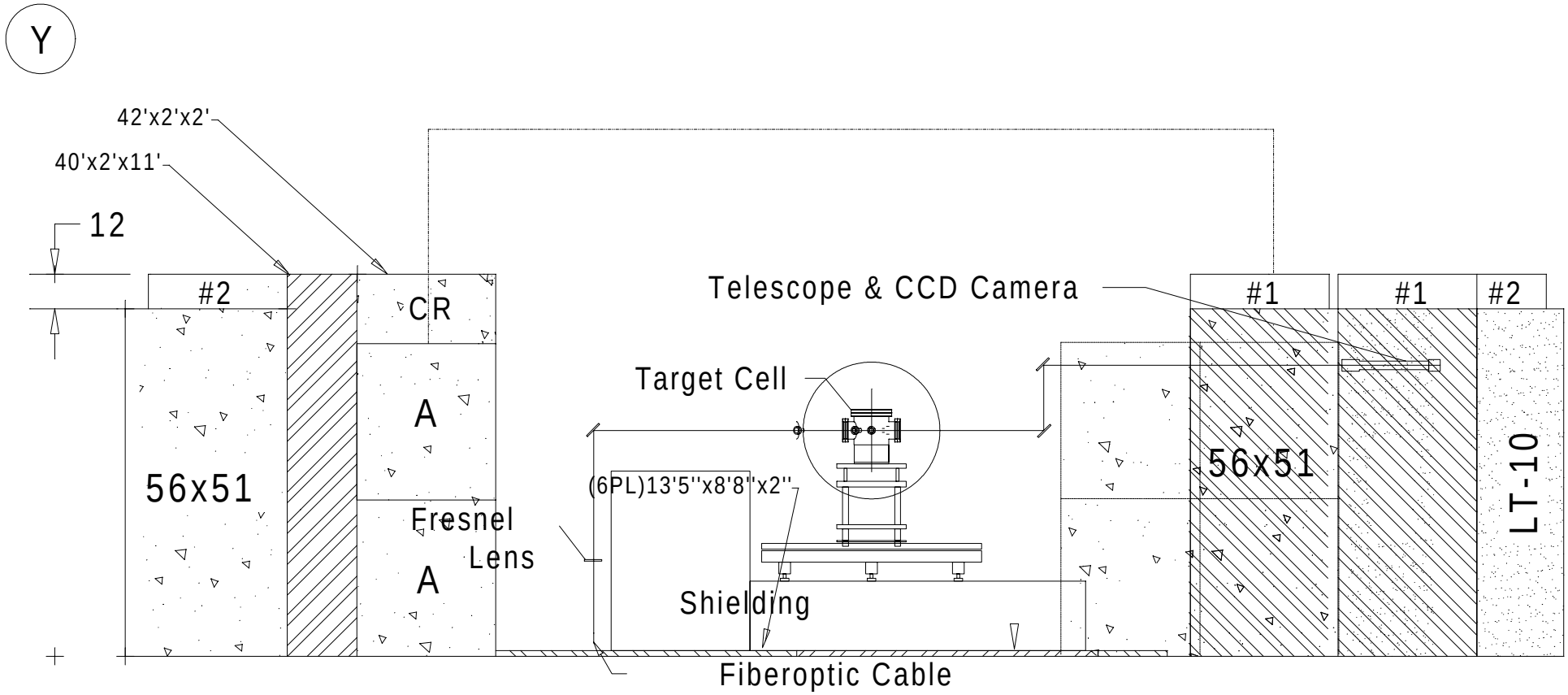

ELEVATION SECTION FF

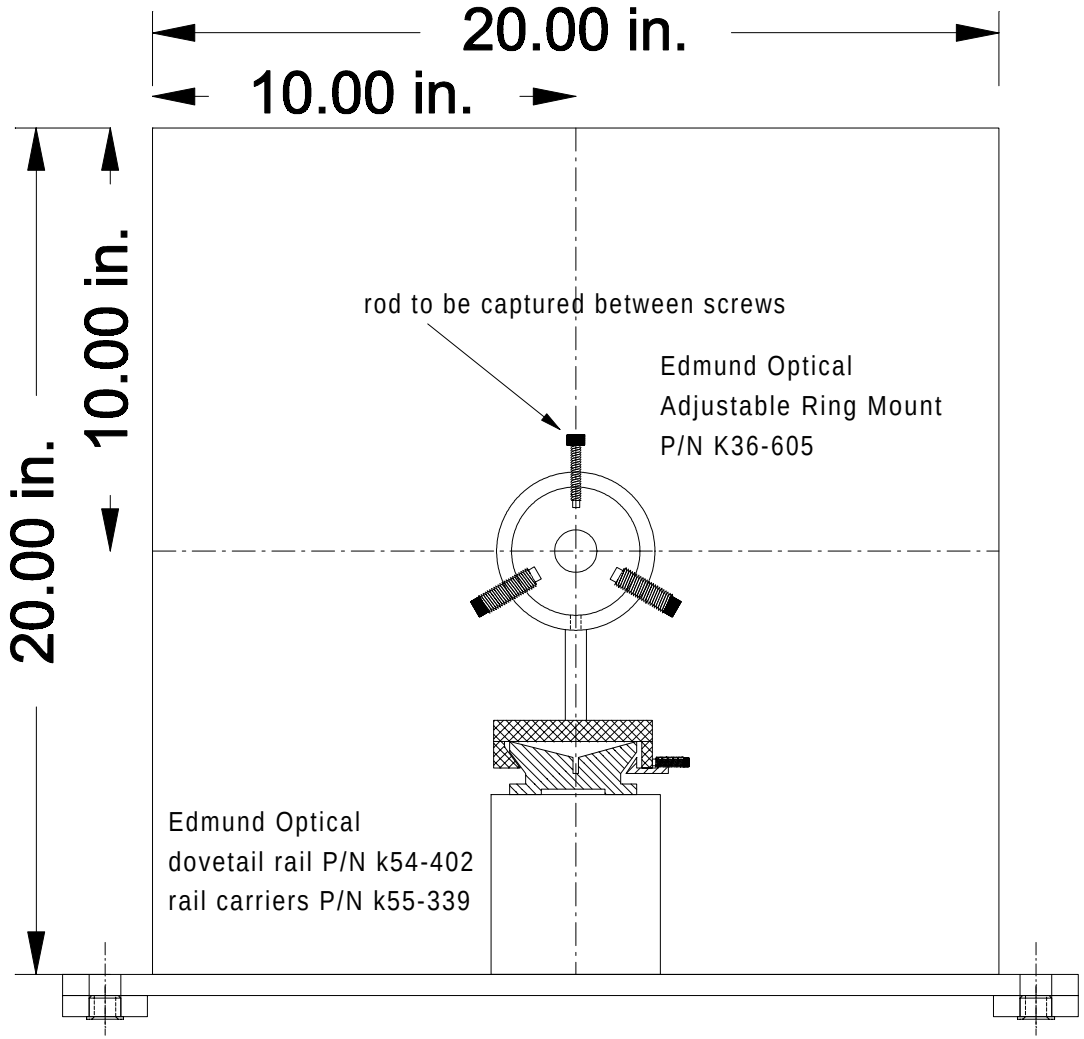

End of outer confinement not shown in this sketch

DRAFT

E-951 Muon Muon Collider Targetry	carbon rod mounting system end view into confinement	Date : 12/19/00
particle trajectory into sketch at CL.		drawn by : C. Finfrock

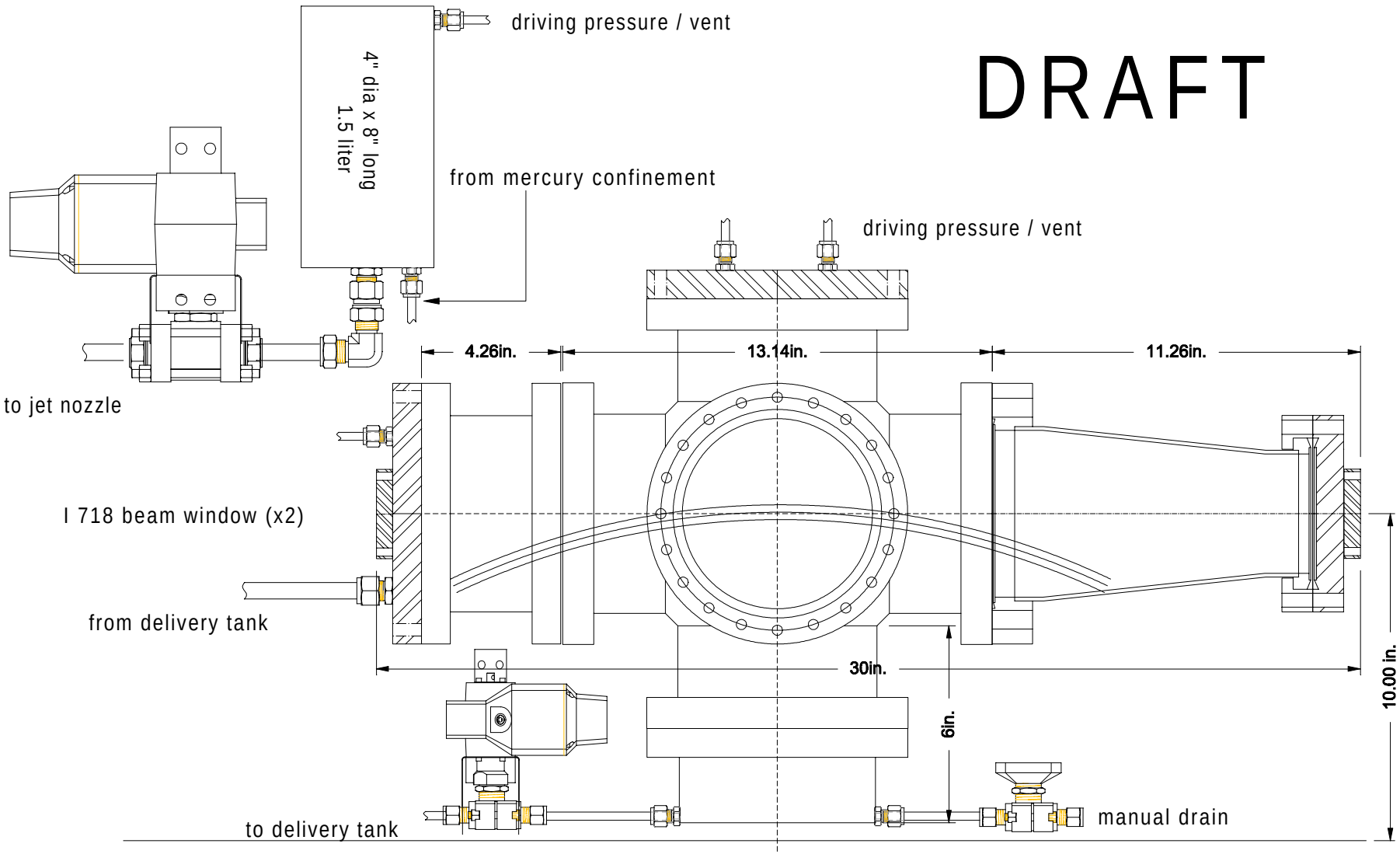

DRAFT

valves shown out of position for clarity

E-951 Muon Muon Collider Targetry	Mercury Jet	Date : 12/01/00 Revised: 12/19/00
projectile trajectory from left to right	Internal Confinement V	drawn by : C. Finfrock

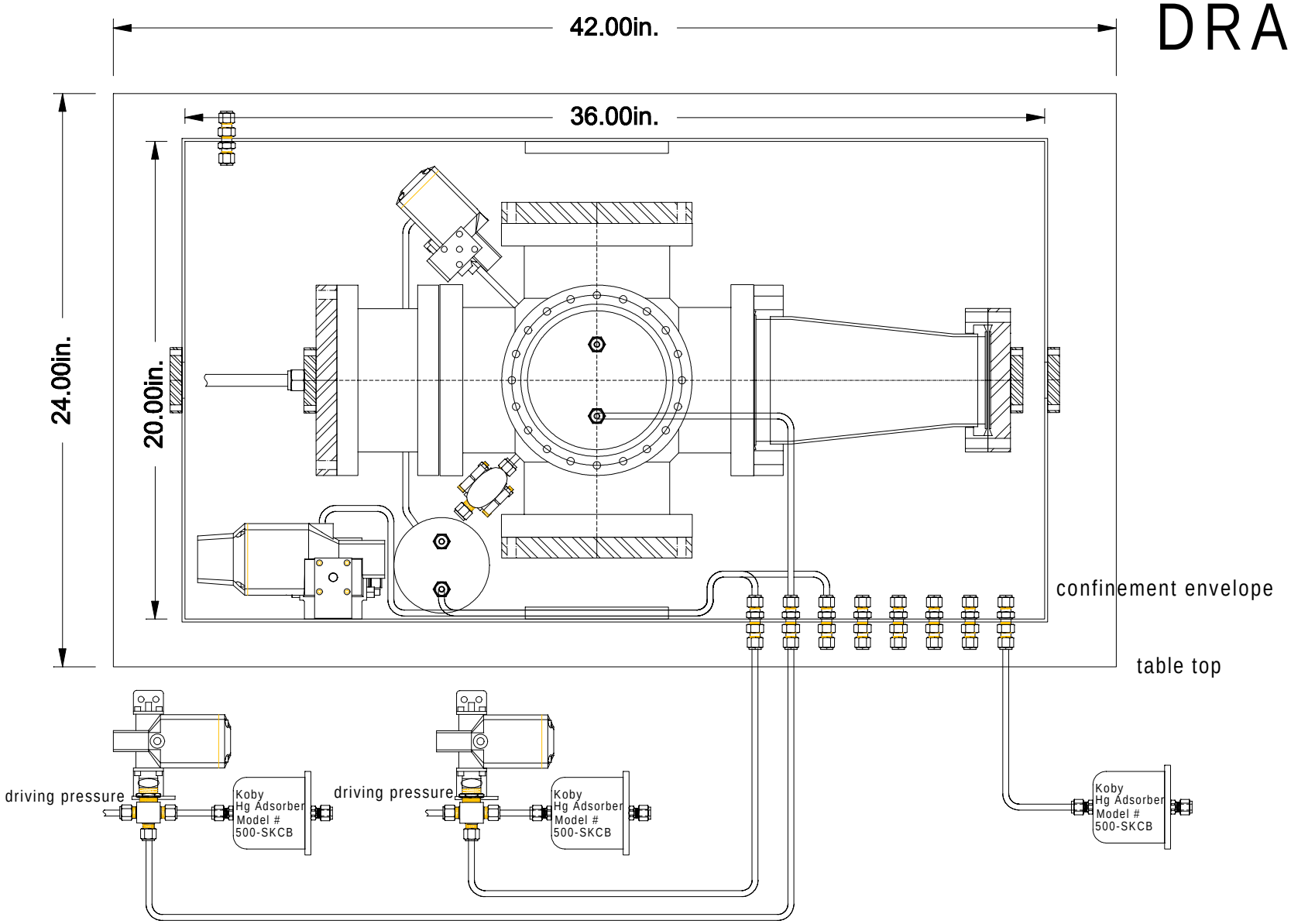

E-951 Muon Muon Collider Targetry	Hg Jet Component Layout in External Confinement, Plan View	Date : 12/06/00 Revised : 12/14/00
particle trajectory from left to right		drawn by : C. Finfrock

DRAFT

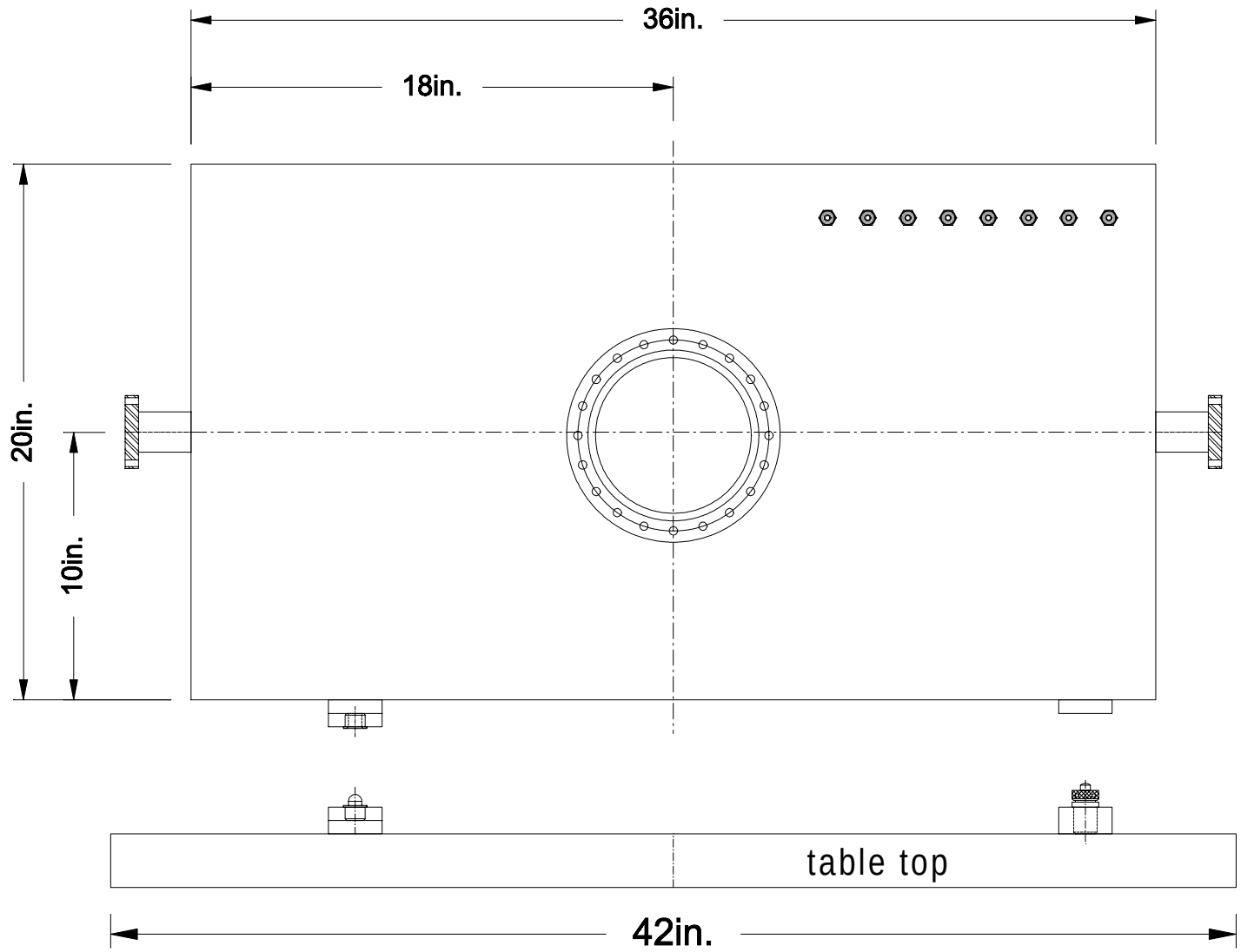

E-951 Muon Muon Collider Targetry	Hg Jet External Confinement Side Elevation View	Date : 12/14/00 Revised : 12/19/00
particle trajectory from left to right		drawn by : C. Finfrock

DRAFT

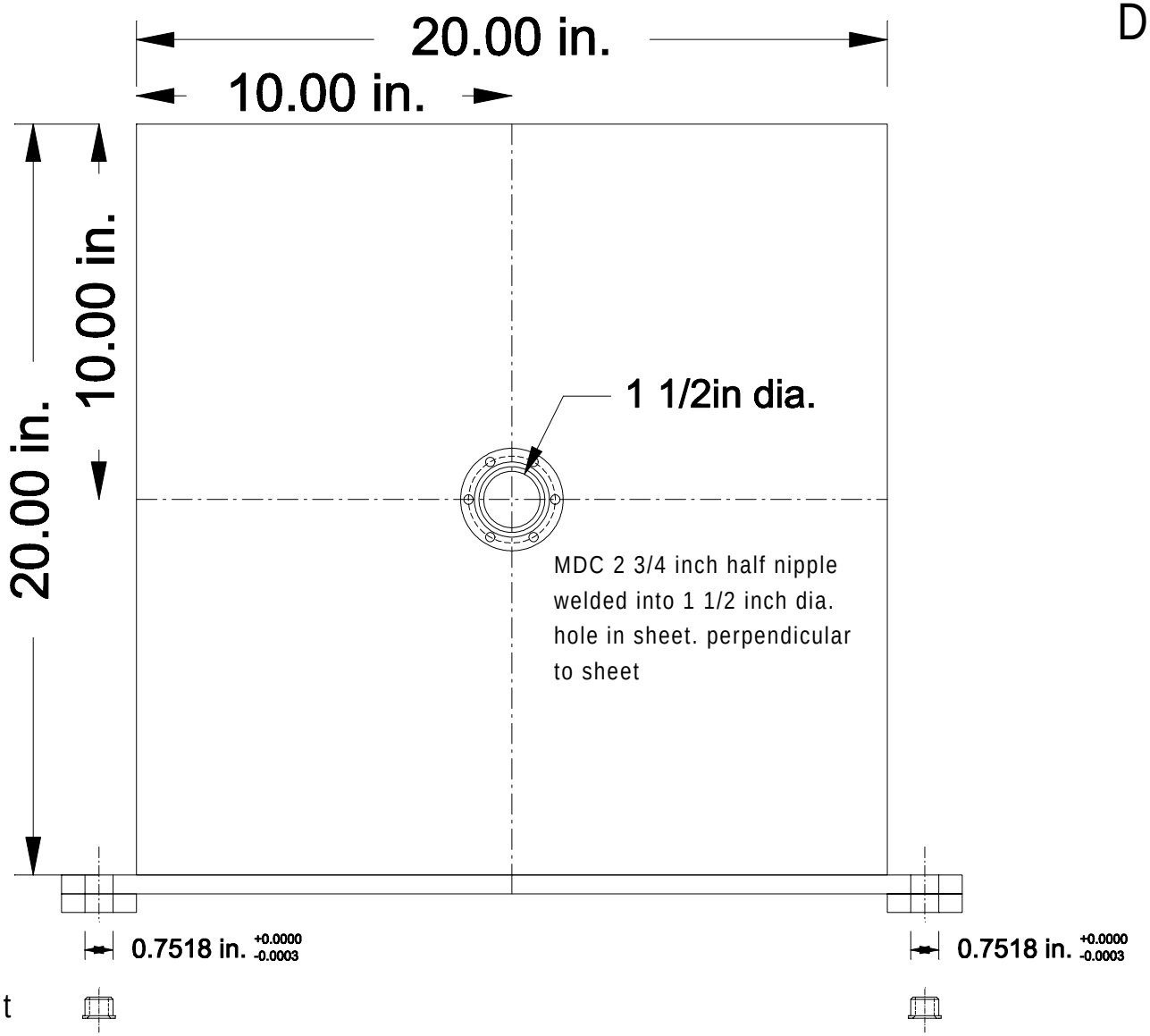

Box Material:
11 ga. 304 SS sheet

E-951 Muon Muon Collider Targetry	Hg Jet External Confinement End View	Date : 12/19/00
		drawn by : C. Finfrock

The CERN Passive Hg Trough

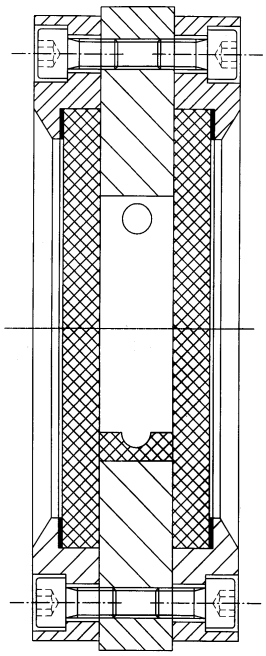

Beamline View

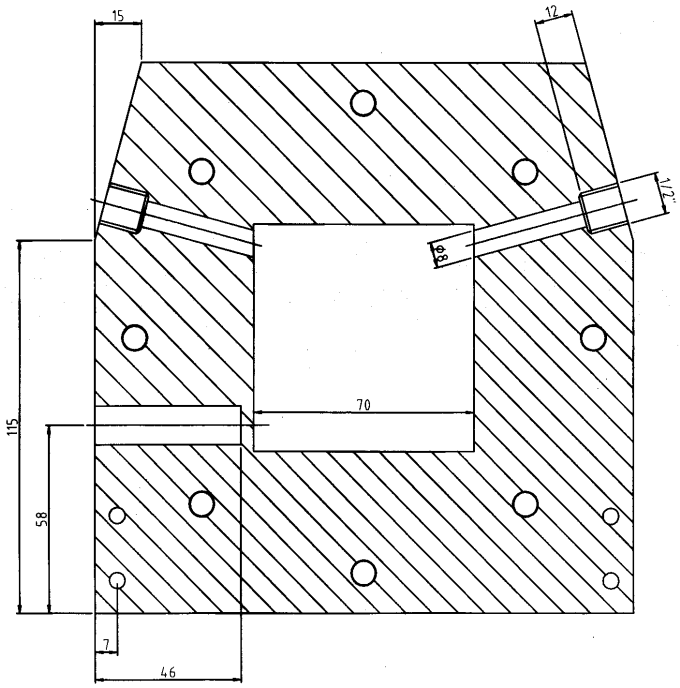

Cross-section view