ICOOL Reference Manual

Version 2.68

5 December 2003

R.C. Fernow *et al*
Brookhaven National Laboratory

.

Caveat Emptor

ICOOL is under active development at the present time. It is being made available as a potential aid to members of the Neutrino Factory and Muon Collider Collaboration for studying ionization cooling problems. Although considerable effort has gone into making the code give accurate answers, it is ultimately the user's responsibility to check that the program gives reasonable answers to any specific problem.

Acknowledgments

A lot of people have made contributions to the development of ICOOL. I would especially like to thank Scott Berg, Steve Bracker, Ulisse Bravar, Dave Carey, William Fawley, Yasuo Fukui, Juan Gallardo, Steve Geer, Krishnaswamy Gounder, Klaus Hanke, Gail Hanson, Barbara Holzer, Steve Kahn, Charles Kim, Eunsan Kim, Harold Kirk, Paul Lebrun, Alessandra Lombardi, Jocelyn Monroe, John Morris, David Neuffer, Robert Palmer, Gregg Penn, Richard Scrivens, Peter Stoltz and Chun-xi Wang for pointing out errors and making useful suggestions for improving this code.

Contents

1. Introduction
    1.1 Electromagnetic field specification
    1.2 Using magnetic field grids with the CELL structure
    1.3 Using background fields
    1.4 Neighbor field option
    1.5 Reference particle
    1.6 Emittance and covariance output in the LOG file
    1.7 Failure message in the LOG file
    1.8 Postprocessor output file
    1.9 Spin
    1.10 Neutrino production data
    1.11 Beam envelope mode
    1.12 Boris push integrator
    1.13 Comments in the ICOOL simulation control file for001.dat
    1.14 Name substitution in the control file for001.dat
    1.15 Keyboard input during execution

2. Command file input
    2.1 Minimal deck structure
    2.2 Problem title
    2.3 Control variables
    2.4 Beam generation variables
    2.5 Physics interactions control variables
    2.6 Histogram definition variables
    2.7 Scatterplot definition variables
    2.8 Z-history definition variables
    2.9 R-history definition variables
    2.10 Emittance plane definition variables
    2.11 Covariance plane definition variables
    2.12 Region definition variables

        2.12.1 Regular region commands

SECTION	start of problem description
BEGS	begin repeating part of section
REPEAT	start of repeated group of commands
CELL	start of cell
SREGION	start of region
ENDREPEAT	end of repeating group of commands
ENDCELL	end of cell
ENDSECTION	end of problem description

2.12.2 Pseudoregion commands

APERTURE	transverse cut
BACKGROUND	start of background field definition
BFIELD	defines background field
DENS	adjust material density
DISP	randomly displaces coordinates
DUMMY	place holder (do nothing) command
DVAR	change particle variable
EDGE	fringe field and other kicks for hard-edge fields
ENDB	end of background field definition
GRID	define magnetic field grid
OUTPUT	writes data to for009.dat
REFP	reference particle parameters
REF2	2nd reference particle
RESET	force particle time to reference time
RKICK	random field kick
ROTATE	rotates coordinates around specified axis
TILT	randomly rotates coordinates in 3D
TRANSPORT	transforms beam coordinates by matrix
!	comment line
&	name substitution

2.12.3 Regular and pseudoregion command parameters

3. Field and material parameters

3.1 Field tags and parameters

NONE	no field
ACCEL	accelerator
BLOCK	thick solenoidal current block
BSOL	“bent solenoid” – combined solenoid and transverse fields
COIL	coil
DIP	vertical field sector dipole
FOFO	alternating solenoid lattice
HDIP	horizontal field sector dipole
HELIX	helical field plus solenoid
HORN	magnetic horn
KICK	kickers, deflection cavity
QUAD	quadrupole
ROD	current carrying rod
SEX	sextupole
SHEET	current sheet
SOL	solenoid
SQUA	skew quadrupole
STUS	static user magnetic field
TROD	tapered rod
TSOL	tapered solenoid
WIG	helical wiggler

3.2 Material tags

VAC	vacuum
GH	gaseous hydrogen
GHE	gaseous helium
LH	liquid hydrogen
LHE	liquid helium
LI	lithium
BE	beryllium
B	boron
C	carbon
AL	aluminum
TI	titanium
FE	iron
CU	copper
W	tungsten
HG	mercury
PB	lead
LIH	lithium hydride

3.3 Geometry tags and parameters

NONE	no material
ASPW	azimuthally symmetric polynomial wedge
ASRW	azimuthally symmetric radial wedge
CBLOCK	cylindrical block
HWIN	hemispherical absorber end
NIA	non-isosceles absorber
PWEDGE	asymmetric polynomial edge wedge
RING	annular block
WEDGE	asymmetric linear edge wedge

4. Other files
4.1 Input files
4.1.1 Beam input data
4.1.2 r-z grid magnetic field input data
4.1.3 RF cavity parameters
4.2 Output files
4.2.1 Program log file
4.2.2 Beam information at specified region
4.2.3 Postprocessor data file
4.2.4 Field values on cylindrically symmetric grid
4.2.5 Field values on 3D grid
4.2.6 RF diagnostics
4.2.7 Neutrino production data
4.2.8 Beam moments
4.3 Internal program files

5. Program execution flags

1. Introduction

ICOOL is a 3-dimensional tracking program that was originally written to study ionization cooling of muon beams[1] . The program simulates particle -by- particle propagation through materials and electromagnetic fields. Particles are tracked and regions are described using "accelerator" coordinates. The program was written with low energy (1 MeV/c -- 1 GeV/c) muons in mind, but tracking of electrons, pions, kaons, and protons is also possible.
The physics processes included are decays, delta rays, multiple scattering, energy loss and straggling. Large sections of the physics interaction code was taken from GEANT v3.21 with minimal interface changes.

Information is input to the code via an ASCII data file, described in section 2.

The incident beam particles can be generated from uniform or Gaussian distributions or read from an input file. The code can read its own output, so simulations can be staged. The particles are tracked through a sequence of regions that have a fixed length in z. In general a region is cylindrical in shape and may be subdivided radially. Every region has a specified material and field type associated with it. Groups of regions can be grouped in cells and a separate cell field can be superimposed over the region fields when tracking is done. In general the program takes user-defined steps in time. For each step it updates the particle position and momentum, taking into account the local field, and corrects the particle's momentum for energy loss and multiple scattering in the step. There is an option for letting the program make adaptive step sizes.

ICOOL uses analytic models to compute field strengths at a given location. There are in general several model levels for each field type that gives the approximation used to calculate the field.

The program always generates an output log file. In addition, depending on control variable settings, it may generate several other output files.

The quantities to plot come from a list of predefined quantities. Plots can be made at the origin and after each region. Z-histories are plots made at user-defined steps in z. There are options to save information about each particle after every region (or step) in an "n-tuple" file.

[1] R.C. Fernow, ICOOL: A simulation code for ionization cooling of muon beams, Proc. 1999 Particle Accelerator Conference, New York, 1999, p. 3020; R.C. Fernow, ICOOL: a tool for muon collider simulations, in Six Month Feasibility Study on High Energy Muon Colliders, B. King(ed), Rinton Press, 2001.

1.1 Electromagnetic field specification

ICOOL uses three methods for specifying the field environment of the tracked particles. (1) Each region has a field associated with it. For simple problems this may provide a sufficient description of the field. (2) Groups of regions can be associated together in cells. Each cell has a field associated with it that applies to all the regions in the cell. This can be used for example to describe *rf* cavity regions inside a solenoid field over the cell. (3) A background field grid can be defined over a specified region of s from any combination of region fields or from a user-supplied field grid. This can be used, for example, to build a complicated field pattern or to apply error fields to some part of a lattice. The actual field seen by a particle at a certain location is the superposition of any or all of these field specifications.

1.2 Using magnetic field grids with the CELL structure

ICOOL can define the magnetic field on a cylindrical grid made up from a sum of individual coils or current sheets. It is possible to define this grid over a short portion of the field lattice and then reuse the same grid over and over. The procedure is to define the grid from z=0 to one grid point beyond the end of one cell. The length of the cell is either the period of the magnetic field, or half the period if the field alternates in direction. One then defines the sheets, for example, which create the field starting one cell before the cell of interest and extending to one cell beyond
it, i.e. over 3 cells. ICOOL gets the field it needs from the z distance from the start of the cell it is currently in, so this same grid can be used at any z location in the lattice.

1.3 Using background fields

The background field construct sets up a static magnetic field on a 3-D cartesian grid. A new definition is begun using the BACKGROUND command. The definition is terminated with the ENDB command. One of the parameters ZTOTALBKG specifies the total incremental distance from the present location that this background can be used. Following the BACKGROUND command the user can enter a series of BFIELD commands, which are used to construct the field on the background grid. Two of the parameters of this command, ZMINBKG and ZMAXBKG, specify the region of the grid where this field will be used. In general ZMAXBKG = ZTOTALBKG. The field type specified by the BFIELD command can either be an internally defined ICOOL field or STUS, which allows a user-specified static field to be read in from a file. In order for higher order interpolation to work properly, it is necessary to make the background grid at least 1 grid point larger than the region where you actually want to track particles. Otherwise the particles will see a zero field at the last grid point.

1.4 Neighbor field option

The control variable NEIGHBOR can be used to model the contribution to a given region of the tails from the fields from neighboring regions. This is used with the soft-edged, analytic delta hyperbolic tangent model of the field available for the field types {BSOL , DIP , HDIP , QUAD , ROD , SEX , SOL , SQUA }. If NEIGHBOR is true, the program looks to see if the regions immediately preceding and following the current region have a field type in the above set and, if so, add the field to the field at the current location.

1.5 Reference particle

ICOOL uses the pseudoregion command REFP to define a reference particle. The REFP command can be used to specify the particle type, starting momentum (PZ0REF), starting time (T0REF), average accelerating gradient (GRADREF), and type of phase model that is used. The user must set the control variable PHASEMODEL equal to 3 or 4. Then the actual phase model that is used is taken from the REFP command. The reference particle is designated as particle 0 in the log output.

If a problem is restarted using an existing beam file that has a non-zero value for P_Z for the reference particle momentum, the reference particle information for the problem is initialized using information from the file. A REFP command must still be used to activate the reference particle logic for the new job. Normally the REFP command immediately follows the SECTION command. The reference particle can be redefined later in a problem, if desired, by using another REFP command. The reference particle data is initialized using the input file data. The momentum is reset by the REFP command if the parameter PZ0REF is not equal to 0. The time is reset by the REFP command is the parameter T0REF is not equal to 0.

When a reference particle has been defined, the internal diagnostics in ICOOL compute time and longitudinal momentum as the difference from the reference particle value at a given location. In addition, when the control variable PHASEMODEL is 3 or 4, the phases of the rf cavities are initialized from the reference particle. The reference particle is started on-axis with no divergence. Stochastic processes, such as multiple scattering and straggling are temporarily turned off. The time when the reference particle crosses the center of the cavity is used to initialize the cavity electric field to 0 (zero crossing). When PHASEMODEL=3 the reference particle is assumed to move with constant velocity (determined from the parameter PZ0REF). When PHASEMODEL=4 the reference particle is tracked through all regions except FR cavities. The reference particle velocity drops due to the mean dE/dx in any material that may be present. It is assumed that the reference particle gains energy linearly in the cavity region. The amount of energy it gains is determined by the parameter GRADREF.

You can use (1) the mean value of the initial time position or (2) the parameter PHASE0 for the ACCEL field type to adjust the phase of the non-reference particles.

A second reference particle can be defined using the REF2 command. This particle is denoted as particle -1 in the log file output.

1.6 Emittance and covariance output in the LOG file

The ICOOL log file can contain particle covariances and two sets of emittance calculations. The first set of emittances, controlled by the NEM namelist commands in the input file, use 2-dimensional calculations for the x-Px, y-Py, and z-Pz phase spaces. The emittance definition removes the slope in each of these 2-dimensional spaces. In addition a control variable (PXYCORR) is provided to compute the emittance using canonical momentum variables inside solenoidal fields (Larmor frame). Another control variable (PZCORR) is provided to remove the Pz-amplitude correlation in the longitudinal phase space calculation. The 6-dimensional emittance calculated by this method is the product of the three 2-dimensional emittances.

The second set of emittance calculations ("LBNL") is closely tied to the covariance calculations and is controlled by the NCV namelist command in the input file. The program first computes second and third order correlations in the beam distributions. Included here are dispersions calculations. These are defined statistically as

$$D = r(x,Pz)\,\sigma(x) < Pz > / \sigma(Pz)$$

$$D' = r(Px,Pz)\,\sigma(Px) / \sigma(Pz)$$

where

$$r(u,v) = (\langle uv\rangle - \langle u\rangle \langle v\rangle) / (\sigma(u)\,\sigma(v))$$

The LBNL emittance calculation computes transverse emittances as the determinant of a 4-dimensional covariance matrix and the 6-dimensional emittance directly as the determinant of a 6-dimensional covariance matrix. This method essentially removes all non-diagonal correlations from the final emittance values.

1.7 Failure message in the LOG file

A message is written in the LOG file FOR002.DAT for each particle that fails to successfully reach the end of the problem. The following information is given in the message. IFLAG is a code indicating the cause of the failure that is listed in section 4 . IEVT is the "event" number.

This number increases sequentially up to the number of particles requested for the simulation. IPNUM is the "particle" number. In general this is set to 1. However, when decays are enabled, this number increments by 1 each time the tracked particle decays. IPFLG is a particle-specific code that may be implemented in the future. JSRG is the ICOOL region number where the failure occurred.

1.8 Postprocessor output file

ICOOL can save information about the particles at production and about the particles and their electromagnetic field environment at various z locations in the problem in the file FOR009.DAT for later analysis by the user. The available information and the format of the file are specified in section 4.2.

Particle information at production is included in the file by setting the control variable OUTPUT1 true. Note that data for the electromagnetic field environment at the production point is NOT included in these records because ICOOL doesn't compute fields until after the particles move away from the production plane. This deficiency can be effectively remedied though by simply defining the first region to be a very thin drift space.

The user can generate particle and field information at the end of a given ICOOL region by preceding the region definition with the OUTPUT pseudocommand. Alternatively, particle and field information at the end of every region can be generated by setting the control variable NTUPLE true.

Particle and field information inside of regions can be generated by setting the control variable RTUPLE true. This variable should be used with caution, since it is capable of generating an enormously large file. The variable RTUPLE works together with the control variable RTUPLEN, which specifies the number of steps inside the region to skip before generating output.

1.9 Spin

Setting the control variable SPIN true enables the handling of spin in ICOOL. At present there are two ways of getting initial spin information: (1) the user may read in a beam input file with spin information already present or (2) muon spin from pion decay may be calculated inside the program. If the control variable SPINTRK=0, the muon helicity is stored in the variable POL(3) when the pion decays and is unchanged as the particle is tracked.

If the control variable SPINTRK=1, the BMT equation is used to track the particle spin in the muon rest frame through electric and magnetic fields. The spin tracking needs a 3-component, normalized Cartesian vector to represent the spin. For muons from pion decay the array POL contains the spin vector in the muon rest frame.

Muon depolarization effects in matter are controlled by the variable SPINMATTER. If SPINMATTER=1 the Rossmanith model of depolarization is used, which relates the amount of depolarization to the energy loss in material regions. If SPINMATTER=2 quantum mechanical formulae are use for the probability of spin flip due to elastic and Coulomb scattering. The

elastic scattering effect is more important and requires that delta rays interactions be enabled (LDRAY=true).

1.10 Neutrino production data

It is possible to make files of neutrino production data using four control variables. The variable NEUTRINO specifies the output file, if any, that should be used. Neutrinos can be generated from muon, pion, and kaon decays. A large number (NNUDK) of independent neutrinos can be generated at each decay point. The user can select which of the generated events are written to the output file using the polar angle variables NUTHMIN and NUTHMAX. Neutrinos have a particle type that uniquely identifies their flavor and their parent particle. See section 4.2.

1.11 Beam envelope mode

It is possible to use ICOOL in a non-tracking mode to calculate the paraxial equations for the beam in a straight channel. To use this, set the CONTROL flag RUN_ENV to .true. (default is .false.). This will automatically run a single particle along the axis, and evolve the envelope equations. OUTPUT must be enabled to the postprocessor file for009.dat. Envelope parameters are output to the file for011.dat.

“Currently, this only works if the beam parameters are given from the BMT input lines. Only the first beam type is used. This applies even if bgen is set to .false.; the particle data in for003.dat is ignored (hopefully, this will be fixed in a later revision). There must be nonzero sigma x and sigma Px; in addition, the average Pz must be > 0.

The envelope equations assume that:

- there are no dispersive regions or shaped absorbers
- the bunch is well matched into the rf bucket, or is drifting
- the reference orbit stays on axis

In addition, the envelope equations will not work well for induction linacs or bunching sections. The only source of longitudinal emittance growth considered is the slope of the dE/ds curve. The size of the rf bucket is ignored, but this can be put in after the fact (see below). Besides paraxial equations of motion, beam scraping is included where the beam is scraped against the widest aperture for each region.

How to interpret the results of the envelope equations

The parameter Psi (listed as "gauss" in the output file) represents how severely the beam is scraped; when Psi is large, only the extreme tails are missing; when Psi is small, the beam distribution is almost flat until the cutoff. The envelope equations give as results z, Bz, <t>, <pz>, transverse emittance e_N, beta, alpha, and dimensionless canonical angular momentum, transverse scraping parameter Phi (listed as "gauss" in output file). There are also parameters

which do NOT take into account losses due to falling out of rf bucket, in particular the total number N_0, and the longitudinal emittance e_L0. Dimensionless canonical angular momentum is <Lcanon>/(2mc e_N). Particle number and longitudinal emittance ignores losses due to particles falling out of rf bucket. Thus, if rf bucket separatrix corresponds to amplitude A_RF, then after those losses are taken into account the particle number is N = N_0 G0(A_RF/e_L0).

The longitudinal emittance taking into account losses from falling out of the rf bucket is
e_L = e_L0 G1(A_RF/e_L0)/G0(A_RF/e_L0).

The transverse "scale length" (not given in output file) is given by
A_G = e_N G1(Psi)/G2(Psi).

The fraction of particles within the transverse acceptance C_perp is
f_perp = G1(C_perp/A_G) / G1(Psi),
or just 1 when Cperp > Psi A_G.

The fraction of particles with the longitudinal acceptance C_L is
f_L = G0(C_L/e_L0), if C_L < A_RF,
or G0(A_RF/e_L0) if C_L > A_RF.

The total number of particles within the 6D acceptance defined
by C_perp, C_L, is given by
N_6D = N_0 f_perp f_L

Key functions:
G0(x) = 1 - exp(-x/2)
G1(x) = 1 - (1+x/2)exp(-x/2)
G2(x) = 1 - (1+x/2+x^2/8)exp(-x/2) ” {G.P}

1.12 Boris push integrator

“The Boris integrator is a space-stepping integration scheme similar to the time-based scheme used in plasma physics (see "Plasma Physics via Computer Simulation", Birdsall and Langdon, p.
356).This scheme is second-order accurate, compared to fourth-order for the default Runge-Kutta, so a smaller stepsize may be required. However, the Boris integrator is less computationally intensive and so may give significantly shorter run times. Adaptive stepsize control is not yet implemented for the Boris integrator.” {P.S.}

The Boris integrator is enabled by setting the control variable STEPRK=false. It only works for straight regions. The program automatically switches to Runge-Kutta integration in curved regions. The underlying algorithm is described in MC note 229.

1.13 Comments in the ICOOL simulation control file for001.dat

“Comments and blank lines can help format a control file so that it is more understandable to human readers. The computer subroutines that read and parse control files don't want to see the comments and blank lines. A new subroutine in ICOOL removes comments and blank lines before the command processor parses them.

Rules for commenting a control file

A *comment* is any string of printable characters whose leftmost character is an exclamation point.
! This is a comment.
!So is this.
! Additional exclamation points !! in a comment don't matter.

A *whitespace* is either a space or a horizontal tab.

A *blank line* either has no characters (except for the end-of-line terminator) or no characters except whitespaces. Blank lines may be placed anywhere in the control file. They are ignored by the command parser.

A *comment line* contains a comment, preceded by zero or more whitespaces. Comment lines may be placed anywhere in the control file. They are ignored by the command parser.

An *end-of-line comment* is a comment placed to the right of a normal input line. End-of-line comments may be placed at the end of any input line, separated from the data ICOOL is to parse by zero or more whitespaces.

```
1.2342.345  !This is an end-of-line comment.
3.4564.567!So is this (valid but hard to read).
RING!This is valid even though "RING" will be read into a 6-character field.
RING      !This is a more readable end-of-line comment.
```

The Use of Informal Comments

Though it is not forbidden, users are strongly discouraged from using "informal comments" -- those without leading exclamation points that are imagined to be out of view of the parser. There are numerous ways to go wrong. For example, free format reads can extract data from more than one input line; an informal comment on the end of any but the last line will generally produce an error. An informal comment following a text string must come with enough preceding spaces to fill the input field with spaces. All of these potential problems are avoided by using formal comments with leading exclamation points.” {S.B.}

1.14 Name substitution

Any parameter in the input command file for001.dat can be defined symbolically using the command

&SUB name value

Following this command any occurrence of the text string

&name

is replaced with its value. The text string should be preceded and followed by at least one blank character.

Any numerical parameter in the input command file for001.dat can be randomly set using the command

&RAN name type val1 val2

where type = {U,G} for uniform or Gaussian distributions. If type = U, then val1 (val2) is the lower (upper) limit of the distribution. If type = G, then val1 is the mean value and val2 is the standard deviation of the distribution.

Following this command any occurrences of the text string

&name

are replaced with its random value. The text string should be preceded and followed by at least one blank character.

1.15 Keyboard input during execution

ICOOL recognizes two keyboard inputs while it is executing.

p pauses execution until the Enter key is pressed
x stops execution with the current particle and region and executes any end of run diagnostics.

2. Command file input

file: FOR001.DAT

The input file consists of:

1. problem title
2. general control variables
3. beam generation variables
4. physics interactions control variables
5. histogram definition variables
6. scatterplot definition variables
7. Z-history definition variables
8. R-history definition variables
9. emittance plane definition variables
10. covariance plane definition variables
11. region definition variables

2.1 Minimal deck structure

```
Drift space example with a scatterplot of x vs. y
$cont npart=500 $         ! control variables
$bmt nbeamtyp=1 $         ! beam definition
1 2 1. 1        ! Gaussian definition of muon beam
0. 0. 0. 0. 0. 0.200      ! means
3e-3 3e-3 0.01 0.005 0.005 0.010    ! sigmas
0                         ! no imposed beam correlations
$ints $                   ! use default interactions
$nhs$                     ! no histograms
$nscnscat =1 $            ! define 1 scatter plot
-0.10 5e-3 40 1 2  -0.10 10e-3 20 2 2
$nzh$                     ! no z-histories
$nrh$                     ! no r-histories
$nem$                     ! no 2-D emittance calculations
$ncv$                     ! no covariance calculations
SECTION                   ! start problem definition
SREGION                   ! define a region
1.00  1  0.003            ! length, 1 radial subregion, step
10. 0.10                  ! radial extent
NONE                      ! no associated field
0. 0. 0. 0. 0. 0. 0. 0. 0. 0. 0. 0. 0. 0. 0.
VAC                       ! vacuum material
CBLOCK                    ! cylindrical block geometry
0. 0. 0. 0. 0. 0. 0. 0. 0. 0.
ENDSECTION                ! end of problem definition
```

2.2 Problem title

A 79 character title for the problem. This title is written onto files 2, 4, and 9, described below.

2.3 Control variables

Namelist: CONT

BETAPERP (R) beta value to use in calculating amplitude variable A^2

BGEN (L) if .true. => generate initial beam particles, otherwise read input from FOR003.DAT (true)

BUNCHCUT (R) maximum time difference allowed between a particle and the reference particle [s] (1E6)

DECTRK (L) if .true. => continue tracking daughter particle following decay (false)

EPSF (R) desired tolerance on fractional field variation, energy loss, and multiple scattering per step (0.05)

EPSREQ (R) required tolerance on error in tracking parameters (1E-3) This parameter is only used if varstep = true

EPSSTEP (R) desired tolerance in spatial stepping to reach each destination plane [m] (1E-6)

FFCR (L) if .true. => inserts form feed and carriage returns in the output log file so there are two plots per page starting at the top of a page (false)

FORCERP (L) if .true. => set x, y, Px, and Py for reference particle to 0 for each new REFP command and for each ACCEL region with phasemodel=4. (true)

FSAV (L) if .true. => store particle info at plane IZFILE into file FOR004.DAT. (false)It is possible to get the initial distribution of particles that get a given error flag be setting the "plane"=IFAIL #. It is possible to get the initial distribution of particles that successfully make it to the end of the simulation by setting the plane= -1.

FSAVSET (L) if .true. => modify data stored using FSAV in FOR004.DAT to have z=0 and times relative to reference particle at plane IZFILE. (false)

F9DP (I) number of decimal points for floating point variables in FOR009.DAT {4,6,8,10,12,14,16} (4)

(Control Variables continued)

GOODTRACK (L) if .true. and BGEN=.false. => only accepts input data from file FOR003.DAT if IPFLG=0.; if .false. => resets IPFLG of bad input tracks to 0 (this allows processing a file of bad tracks for diagnostic purposes) (true)

IZFILE (I) z-plane where particle info is desired when using FSAV. Use 1 to store beam at production. Saves initial particle properties for bad tracks if IZFILE=IFAIL #. Saves initial particle properties for tracks that get to the end of the simulation if IZFILE=-1. IZFILE should point to the end of a REGION or to an APERTURE , ROTATE or TRANSPORT pseudoregion command.

MAGCONF (I) if 19 < MAGCONF=mn < 100 => reads in file FOR0mn.DAT, which contains data on solenoidal magnets. Used with SHEET, model 4.(0)

MAPDEF (I) if 19 < MAPDEF=mn < 100 => reads in file FOR0mn.DAT, which contains data on how to set up field grid. Used with SHEET, model 4.(0)

NEIGHBOR (L) if .true. => include fields from previous and following regions when calculating field. (false) This parameter can be used with analytic fields when the magnitude of the field doesn't fall to 0 at the region boundary.

NEUTRINO (I) if 19 < NEUTRINO=mn < 100 => writes out file FOR0mn.DAT, which contains neutrino production data. See section 4.2 for the format. (0)

NNUDK (I) # of neutrinos to produce at each muon, pion and kaon decay. (1)

NPART (I) # of particles in simulation. The first 100,000 particles are stored in memory. Larger numbers are allowed in principle by writing the excess particle information to disc. However, there can be a large space and speed penalty in doing so.

NPRNT (I) # of diagnostic events to print out to log file (-1)

NSECTIONS (I) # of times to repeat basic cooling section (1)
This parameter can be used to repeat all the commands between the SECTION and ENDSECTION commands in the problem definition. If a REFP command immediately follows the SECTION command, it is not repeated.

NTUPLE (L) if .true. => store information about each particle after every region in file FOR009.DAT. This variable is forced to be false if RTUPLE= true.(false)

NUTHMIN (R) Minimum polar angle to write neutrino production data to file. [radians](0.)

(Control Variables continued)

NUTHMAX (R) Maximum polar angle to write neutrino production data to file. [radians](3.14)

OUTPUT1 (L) if .true. => write particle information at production (plane 1) to the postprocessor output file for009.dat. (false)

PHANTOM (L) if .true. => force particle to keep initial transverse coordinates after every step. This is useful for making magnetic field maps. (false)

PHASEMODEL (I) controls how the phase is determined in rf cavities. (0)
1: takes phase directly from input deck
2: uses multi-cavity phase shift algorithm from input deck (cf. ACCEL)
3,4: takes phase model from REFP command
5: reads phases in from file FOR0mn.DAT, where RFPHASE=mn.

PRLEVEL (I) controls level of print information to log file (for NPRINT events);higher # gives more print(1)
1: values at end of region
2: + values at end of each time step
3: + E,B values at each step
4: + information in cylindrical coordinates

PRNMAX (I) Sets maximum number of steps to generate print out inside a region (300)

PZMINTRK (R) Sets the value of Pz below which tracking stops. [GeV/c] (0.)

RFDIAG (I) if 20 < RFDIAG=mn < 100 => writes rf diagnostic information at the end of each accelerator region to file FOR0mn.DAT. (0)

RFPHASE (I) if PHASEMODEL=5 => reads rf phases, frequencies and gradients for the cavities from file FOR0mn.DAT, where RFPHASE=mn
and 19 < mn < 99 (0)

RNSEED (I) negative random number seed (-1)

RTUPLE (L) if .true. => particle information in file FOR009.DAT is generated after every RTUPLEN steps. (false)

RTUPLEN (I) # of steps to skip between RTUPLE generated outputs. (5)

(Control Variables continued)

RUN_ENV (L) if true => run ICOOL in beam envelope mode, i.e. no tracking (false)

SCALESTEP (R) factor that modifies all step sizes in a problem simultaneously (1.0)
Only works in fixed stepsize mode.

SPIN (L) if .true. => include calculation of polarization. (false)

SPINMATTER (I) controls whether muon depolarization effects in matter are simulated (0)
0: no depolarization simulation
1: depolarization simulation using Rossmanith model
2: depolarization simulation using spin flip probabilities

SPINTRK (I) controls whether spin variables are tracked (0)
0: no spin tracking
1: track spin in muon rest frame using BMT equations

STEPMAX (R) maximum step size that can be used for variable stepping [m] (1)

STEPMIN (R) minimum step size that can be used for variable stepping [m] (1E-5)

STEPRK (L) if .true. => use 4th order Runge-Kutta integrator for tracking. Otherwise it uses the Boris push method in straight regions. (true)

TERMOUT (L) if .true. => write output to terminal screen (true)

TIMELIM (R) time limit for simulation [min] (1E9)

VARSTEP (L) if .true. => use adaptive step size; otherwise use fixed step ZSTEP (until reaching the last step in a region). This variable is forced to be false in wedge material regions and when the number of radial regions is greater than 1.(true)

2.4 Beam generation variables

Namelist: BMT

NBEAMTYP (I) # of beam types, e.g. particles of different mass {1-5} (1)

Other input variables

The following input is only read if BGEN = .true.

(2-4 repeated for each beam type)

2.1) PARTNUM (I) particle number
2.2) BMTYPE (I) beam type { magnitude = 1:e 2:mu 3:pi4:K 5:p; sign = charge}
2.3) FRACBT (R) fraction of beam of this type {0-1} The sum of all fracbt(i) should = 1.0
2.4) BDISTYP (I)beam distribution type {1:Gaussian 2:uniform circular segment}
If BDISTYP = 1
3.1) X1BT(i),i=1,3 (R) mean value of x,y,z for this beam type [m]
3.2)P1BT(i),i=1,3 (R)mean value of px,py,pz for this beam type [GeV/c]
4.1)X2BT(i),i=1,3 (R)standard deviation of x,y,z for this beam type; assumes Gaussian [m]
4.2)P2BT(i),i=1,3 (R)standard deviation of px,py,pz for this beam type;
assumes Gaussian [GeV/c]

(Beam continued)

If BDISTYP = 2

3.1)X1BT(1),X2BT(1)	(R)r_low,r_high [m] {>0}
3.2) X1BT(2),X2BT(2)	(R) phi_low,phi_high [degrees]
3.3) X1BT(3),X2BT(3)	(R) z_low,z_high [m]
4.1) P1BT(1),P2BT(1)	(R) Pr_low,Pr_high [GeV/c] {>0}
4.2) P1BT(2),P2BT(2)	(R) Pphi_low,Pphi_high GeV/c]
4.3) P1BT(3),P2BT(3)	(R) Pz_low,Pz_high [GeV/c]
5) NBCORR	(I) # of beam correlations {0-6}

(6-repeated NBCORR times)

6.1) CORRTYP	(I) correlation type
6.2) CORR1(i)	(R) correlation parameter 1
6.3) CORR2(i)	(R) correlation parameter 2
6.4) CORR3(i)	(R) correlation parameter 3

CORRTYP	= 1	angular momentum appropriate for constant solenoid field
	= 2	Palmer amplitude correlation
	= 3	rf bucket, small amplitude ellipse
	= 4	rf bucket, small amplitude separatrix
	= 5	rf bucket, large amplitude separatrix
	= 6	Twiss parameters in x Px
	= 7	Twiss parameters in y Py
	= 8	(not used)
	= 9	equal time in solenoid
	=10	Balbekov version of amplitude-energy

For CORRTYP = 1

2 solenoid field [T]

For CORRTYP = 2

2 correlation strength

3 effective $\beta_\perp$ [m]

dPz = CORR1 * ((r/CORR2)^2+X'^2 + Y'^2)

(Beam continued)

For CORRTYP = 3,4

2 peak electric field on axis[MV/m]
3 synchronous phase [degrees]
4 rf frequency [MHz]

Set desired σ_Z in input beam definition. Set $\sigma Pz = 0$.

For CORRTYP = 5

2 peak electric field on axis[MV/m]
3 synchronous phase [degrees]
4 rf frequency [MHz]

Set desired σ_Z and $\sigma Pz = 0$ in input beam definition.

For CORRTYP = 6

2 Twiss alpha parameter
3 Twiss beta parameter [m]
4 Twiss epsilon parameter[m]

The spread in x and Px in the beam definition are ignored. For Gaussian distributions epsilon is the rms geometrical emittance. For uniform distributions it specifies the limiting ellipse.

For CORRTYP = 7

2 Twiss alpha parameter
3 Twiss beta parameter [m]
4 Twiss epsilon parameter[m]

The spread in y and Py in the beam definition are ignored. For Gaussian distributions epsilon is the rms geometrical emittance. For uniform distributions it specifies the limiting ellipse.

For CORRTYP = 9

2 desired axial beta (=v/c) value βo
3 azimuthal angle of transverse momentum [deg]

Set up with pz and σPz such that $\beta z > \beta o$. Set up initial pt = 0. This correlation determines the pt for a given pz that gives all the initial particles the same βo. If parameter 3 is 0, the azimuthal angle is chosen randomly.

(Beam continued)

For CORRTYP = 10

2	E_{ref} [GeV]
3	B_{abs} [T]
4	σ_E [GeV]

$A_B^2 = (p_T/mc)^2 + (e\ B_{abs}\ r\ /\ 2\ mc^2)^2$

$E = E_{ref}\ \{\ 1 + A_B^2\ \}^{0.5} + dE$

dE: random energy deviation taken from GAUS(0, σ_E)
Enter the normal beam input $\sigma_{Pz} = 0$.

2.5 Physics interactions control variables

Namelist: INTS

LDEDX (L) if .true. => simulate mean ionization energy loss dE/dx (true)

LSTRAG (L) if .true. => simulate energy straggling(true)

LSCATTER (L) if .true. => simulate multiple scattering (true)

LDRAY (L) if .true. => simulate discrete energy loss from delta rays (false)
When LDRAY is true, the program forces the parameters DELEV=3 and STRAGLEV=5.

LDECAY (L) if .true. => simulate particle decays(false)

LINTERACT (L) if .true. => simulate inelastic pion interactions(false)

LSPACE (L) if .true. => consider effects of space charge (false)

DELEV (I) model level for dEdx (2)
1: Bethe-Bloch
2: Bethe-Bloch with density effect
3: restricted Bethe-Bloch with density effect
4: test mode with dE = const * dz, independent of velocity and angle

STRAGLEV (I) model level for straggling (4)
1: Gaussian(Bohr)
2: Landau distribution
3: alternate routine for Landau distribution
4: Vavilov distribution (with appropriate Landau and Gaussian limits determined by the program)
5: restricted energy fluctuations from continuous processes with energy below DCUTx.

SCATLEV (I) model level for multiple scattering (4)
1: Gaussian(0, Rossi-Greisen)
2: Gaussian(0, Highland)
3: Gaussian(0, Lynch-Dahl)
4: Moliere distribution (with Rutherford limit)
5: Rutherford
Level 2 contains a logarithm term in computing the Gaussian width, so it is not useful for general monte carlo work. It gives an accurate estimate of the width of the distribution when the step size is the same as the region size. In the Rutherford models (4,5) the actual number of scatters in a given step is taken from a Poisson distribution.

(Interactions continued)

DECLEV (I) model level for particle decays(1)
1: uniform polar decay angle for daughter particle in parent rest frame
2: 90 degree polar decay angle for daughter particle in parent rest frame
3: uniform polar decay angle for daughter particle in parent rest frame; no mu-->e decays.
4: 90 degree polar decay angle for daughter particle in parent rest frame; no mu->e decays
5: uniform polar decay angle for daughter particle in parent rest frame; no mu-->e decays;
save accumulated fractional decay length in POL(1).

SPACELEV (I) model level for space charge (3)
1: image charge of moving bunch in cylindrical, metallic can
2: crude transverse space charge for free space applied to all regions
3: Gaussian bunch space charge (transverse and longitudinal) for free space applied to all regions
4: same as model 3 for single bunch in a bunch train. All the particles are superimposed on 1 bunch given by parameter FRFBUNSC. Adjust PARBUNSC accordingly.

BGDELEV4 (R) beta*gamma for DELEV=4 calculation (3.0)

DCUTE (R) kinetic energy of electrons, above which delta rays are discretely simulated[GeV] (1E-4)

DCUTM (R) kinetic energy of muons and other heavy particles, above which delta rays are discretely simulated [GeV] (1E-4)

ENGMIN (R) kinetic energy of particle, below which tracking stops [GeV] (1E-3)

FACFMS (R) factor to correct the Z(Z+1) term in the characteristic angle squared χ_C^2
in Moliere multiple scattering theory (1.0)

FACMMS (R) factor to correct screening angle squared χ_A^2 in Moliere multiple scattering theory (1.0)

FASTDECAY (L) if true => use unphysical decay constants to make {μ,π,K} decay immediately. (false)

FRFBUNSC (R) RF frequency used for space charge model 4. [MHz] (201.)

PARBUNSC (R) number of muons per bunch for space charge calculation (4E12)

2.6 Histogram definition variables

Namelist: NHS

NHIST	(I) # of histograms{0-20} (0)
HAUTO	(L) if .true.=>histograms are scaled for no overflows (true)
HCPRN	(L) if .true. =>histogram contents are written to LOG file (false)

Other input variables

(2-repeated for each histogram)

2.1) HXMIN	(R) minimum value
2.2) HDX	(R) step size
2.3) NHBINS	(I) total # of bins {1-50}
2.4) IHVAR	(I) a flag indicating variable to histogram

1: X	11: X'	21: Xo	31: Bx
2: Y	12: Y'	22: Yo	32: By
3: Z	13: (space angle)	23: Zo	33: Bz
4: Px	14: r	24: Px0	34: Ex
5: Py	15: phi	25: Pyo	35: Ey
6: Pz [2]	16: Pr	26: Pzo	36: Ez
7: ct[2]	17: Pphi	27: cto	37: Sx
8: Pmag	18: Lz	28: A^2 [1]	38: Sy
9: E	19: L^2	29: r^2	39: Sz
10: KE	20: (arclength)	30: muon helicity	40:(phase)

2.5) IHDES (I) the s-plane location for the histogram

Note that s-regions are not the same as physical regions, since they also count any pseudoregions,
such as OUTPUT or ROTATE, that may be present. You can find the s-region listed in the left most column of the region summary table in the log output file (FOR002.DAT).

1: variables at production
s: variables at s-region s
-1: variables at production that make it to the end of the simulation
(only IHVAR=1..7 are defined)
ifail : histogram quantities when this ifail occurs {< -10}

(HISTOGRAM continued)

[1] To plot A^2, use the BETAPERP control variable.

[2] If a reference particle is defined, the difference with respect to the reference particle is used.

2.7 Scatterplot definition variables

Namelist: NSC

NSCAT (I) # of scatterplots {0-20} (0)
SAUTO (L) if .true. => scatterplots are scaled for no overflows (true)

Other input variables

(2-repeated for each scatterplot)

2.1) SXMIN (R) minimum x value
2.2) SDX (R) step size in x
2.3) NSXBIN (I) total # of x bins {1-50}
2.4) ISXVAR (I) a flag indicating x variable to scatterplot
(see definitions in IHVAR above)
2.5) ISXDES (I) the s-plane location for the x variable in the scatterplot (see below)
2.6) SYMIN (R) minimum y value
2.7) SDY (R) step size in y
2.8) NSYBIN (I) total # of y bins {1-23}
2.9) ISYVAR (I) a flag indicating y variable to scatterplot
(see definitions in IHVAR above)
2.10) ISYDES (I) the s-plane location for the y variable in the scatterplot

Note that s-planes are not the same as physical regions, since they also count any pseudoregions, such as OUTPUT or ROTATE, that may be present. You can find the s-region listed in the left most column of the region summary table in the log output file (FOR002.DAT).

1: variables at production
s: variables at s-plane s
-1: variables at production that make it to the end of the simulation
(only IHVAR=1..7 are defined at production)
ifail: make scatterplot of events when ifail occurs. Both ISXDES and
ISYDES must equal ifail.

2.8 Z-history definition variables

Namelist: NZH

NZHIST	(I) # of Z-histories {0 - 20} (0)
ZHAUTO	(L) if .true. => z-histories data is scaled to fill plot (true)
ZHPRIN	(L) if .true. => values printed in log file (false)

Other input variables

(2-repeated for each z-history)

2.1) NZHPAR	(I) # of particles to plot {1-10}
2.2) ZHXMIN	(R) minimum value of z to plot [m]
2.3) ZHDX	(R) z distance between plot values [m]
2.4) NZHXBIN	(I) #of z points {1-70}
2.5) ZHYMIN	(R) minimum value of variable to plot
2.6) ZHYMAX	(R)maximum value of variable to plot
2.7) IZHYVAR	(I) variable flag(see definitions in IHVAR above)

2.9 R-history definition variables

Computes minimum, maximum, mean and standard deviation of the distribution of all particles for a variable at the end of regions

Namelist: NRH

NRHIST	(I) # of R-histories {0 - 10} (0)
RHAUTO	(L) if .true. => R-histories data is scaled to fill plot (true)
RHPRIN	(L) if .true. => values printed in log file (false)

Other input variables

(2-repeated for each R-history)

2.1) IRHZMIN	(I) starting region number
2.2) IRHDZ	(I) increment in region number along horizontal axis
2.3) RHYMIN	(R) minimum value of variable to plot
2.4) RHYMAX	(R) maximum value of variable to plot
2.5) IRHYVAR	(I) variable flag(see definitions in IHVAR above)

2.10 Emittance plane definition variables

Calculates 2-D emittances at specified planes

Namelist: NEM

NEMIT (I) # of s-planes where the emittance or polarization should be calculated {0-100}(0)
BZFLDPRD (R) Bz for solenoid at location of production plane (0.) This is used for canonical angular momentum correction.
DISCORR (L) if .true. => correct x and y emittance calculations for dispersion (false)
PXYCORR (L) if .true. => Px and Py are corrected (for the emittance calculation) for the vector potential in a solenoid field.(false)
PZCORR (L) if .true. => the normalized longitudinal emittance is corrected for the Pz versus transverse amplitude correlation (false)
SIGMACUT (L) if .true. => tails of {x ... Pz} are cut at SIG_CUT sigmas before the emittance is calculated. (true)
SIG_CUT (R) # of sigmas to cut off tails of {x ... Pz} for the emittance calculation. (4.)

Other input variables

(repeated for each emittance plane)

2) IEMDES(i),i=1,N (I) s-plane identification # where emittance or POLARIZATION is calculated. Note that s-planes are not the same as physical regions, since they also count any pseudoregions, such as OUTPUT or ROTATE, that may be present. You can find the s-region listed in the left most column of the region summary table in the log output file (FOR002.DAT).
1: variables at production
s: variables at s-plane s

Output data is normalized relative to first plane in IEMDES list. Note that in a solenoidal field emittances are only correctly computed when PXYCORR=true or at s-planes where B = 0. A returned emittance value of -998 or -999 indicates the program could not calculate a sensible emittance.

2.11 Covariance plane definition variables

Calculates covariance matrices and related “LBNL” emittances

Namelist: NCV

NCOVAR (I) # of s-planes where the covariance should be calculated {0-100} (0)

Other input variables

2) ICVDES(i),i=1,N (I) s-plane identification # where covariance is calculated. Note that s-planes are not the same as physical regions, since they also count any pseudoregions, such as OUTPUT or ROTATE, that may be present. You can find the s-region listed in the left most column of the region summary table in the log output file (FOR002.DAT).
1: variables at production
s: variables at s-plane s

2.12 Region definition variables

Region commands (A4) **Use UPPER case.**

2.12.1 Regular region commands *****

1) SECTION
Start of cooling section region definition; the data must end with an ENDSECTION ; it can enclose any number of other commands. If it is desired to repeat the section definitions, the control variable NSECTIONS should be set >1 and a BEGS command is used to define where to start repeating.

2) BEGS
This marks the beginning of the part of region definitions that will be repeated with the NSECTIONS control variable. This command doesn't do anything if NSECTIONS = 1.

3) REPEAT
Start of a repeating group of region commands; the data must end with an ENDREPEAT command. This can be used to repeat regions inside a cell. The repeat loop can enclose any number of {SREGION, APERTURE, DENS, DISP, DUMMY, DVAR, EDGE, OUTPUT, REFP, RESET, ROTATE, TILT, TRANSPORT} commands. Repeat sections cannot be nested in other repeat sections. (see parameters
below)

4) CELL
Start of a repeating group of region commands; the data must end with an ENDCELL command. The cell loop can enclose any number of commands listed above under REPEAT plus REPEAT and ENDREPEAT commands. It has an associated cell field, which is superimposed on the individual region fields. Cell sections cannot be nested in other cell sections. (see parameters below)

5) SREGION
Start of new s-region. Describes field and material properties. (see parameters below)

6) ENDREPEAT End of REPEAT data block.

7) ENDCELL End of CELL data block.

8) ENDSECTION
End of region data definition; the section of data is repeated NSECTIONS times.

2.12.2 Pseudo-region commands (A4) *****

APERTURE Collimates beam at aperture (see parameters below)

DENS Adjust material density (see parameters below)

DISP Randomly displaces particle coordinates (see parameters below)

DUMMY
Dummy placeholder in the problem definition. This can be used to save a place for an OUTPUT command in the problem definition. This makes it more convenient to keep the size of the for009.dat file manageable. (no parameters)

DVAR Change parameter value for all particles (see parameters below)

EDGE Fringe field and other kicks for hard-edged field models (see parameters below)

GRID Defines new magnetic field grid (see parameters below)

OUTPUT
Enables the writing of particle information at the end of the following region to FOR009.DAT. This command will only function if both NTUPLE and RTUPLE are false. (no parameters).

REFP Define reference particle properties (see parameters below)

REF2 Define 2nd reference particle properties (see parameters below)

RESET Change time of all particles to reference particle time (no parameters)

RKICK Random magnetic kicks (see parameters below)

ROTATE Coordinate system rotation (see parameters below)

TILT Randomly rotates particle coordinates in 3D (see parameters below)

TRANSPORT
User input of transport matrix. A reference particle must be defined to use this command. (see parameters below)

(Pseudocommands continued)

BACKGROUND

Start of a background field definition section. the data must end with an ENDB command. This section may include any number of BFIELD commands. (see parameters below)

BFIELD	Define background field (see parameters below)
ENDB	End definition of background field (see parameters below)
!	(see discussion on comments in the Introduction)
&	(see discussion on name substitution in the Introduction)

2.12.3 Regular and pseudoregion command parameter ****

It is important that parameters listed like 1.1 to 1.3 below appear on the same line in the input file and that parameters like 2.1 start a new line.

APERTURE
1.1) IAPERTYPE (I)1:elliptical 2:rectangular
1.2) APERLIM1 (R)x half-width [m]
1.3) APERLIM2 (R)y half-width [m]

BACKGROUND
1.1) BENTBKG (L) set TRUE if reference trajectory is curved
1.2) PREFBKG (R) reference momentum thru background grid [GeV/c]
1.3) ZTOTALBKG (R) total incremental length in z to use this BG field [m]
2.1) XLOBKG (R) low x value of background grid [m]
2.2) DXBKG (R) bin size in x for background grid [m]
2.3) NXBKG (I) number of x bins {<31}
2.4-6) YLOBKG, DYBKG, NYBKG(similar to corresponding x parameters)
2.7) ZLOBKG (R) minimum distance into background region before using background field, i.e. the background field is 0 for distances
into background region less than ZLOBKG.
The maximum distance to use the background field is ZLOBKG+ZTOTALBKG.
Distances in z are in relative units, i.e. they start at 0.
2.8) DZBKG (R) bin size in z for background grid [m]
2.9) NZBKG (I) number of z bins{<201}
2.10) INTERBKG (I) interpolation order for background grid {1-3}

BFIELD
1.1) ZOFFBKG (R) offset in z before starting edge of this field contribution [m]
This can be used to start field contributions at varying distances from the beginning of the current
background field.
1.2) RMAXBKG (R) maximum radius at which this field should be applied to the background grid [m]
1.3) ZMINBKG (R) Starting z location at which to consider this field contribution [m]
1.4) ZMAXBKG (R) Ending z location at which to consider this field contribution [m]
ZMINBKG and ZMAXBKG are measured from the start of the current background field. If round-off error causes the last BG field point to be in error, increase ZMAXBKG by a small amount, e.g. by 0.001.
..
2) BFTAG (A4) background field tag (see FTAG values below)
3) BFPARM (R) 15 parameters describing field (see specific field type below)

(Command parameters continued)

CELL

1) NCELLS (I) Number of times to repeat the commands in this cell block.
2) CELLFLIP (L) If .true. => flip cell field for alternate cells
3)CFTAG (A4) Field tag for field that is superimposed over all the regions in this cell; see FTAG values below.
4) CFPARM (R) 15 parameters describing field (see specific field type below)

DENS

1.1) material (A4) material tag
1.2) factor (R) factor to change current density value

DISP

1.1) D (R) σ of displacement distribution [m]
1.2) PHI (R) angle of rotation w.r.t. x axis in x-y plane [deg]
If PHI = -1 => angle of rotation axis is chosen randomly from a uniform distribution.

DVAR

1.1) variable index (I) see list under histograms {1-12}
1.2) change (R) amount to change variable [m, GeV/c, s, GeV]
1.3) apply to (I) {0,1,2}
0: all particles
1: reference particle only
2: normal particles only

(Command parameters continued)

EDGE

1) edge type (A4) {SOL, DIP, HDIP,QUAD,SQUA,SEX, BSOL,FACE}
2.1) model # (I) {1}
2.2-4) p1, p2, p3 (R) model-dependent parameters

Edge type = SOL
p1: B_S [T]
Edge type = DIP
p1: B_Y [T]
Edge type = HDIP
p1: B_X [T]
Edge type = QUAD
p1: gradient [T/m]
Edge type = SQUA
p1: gradient [T/m]
Edge type = SEX
p1: b_2 [T/m^2] (cf. C. Wang & L. Teng, MC 207)
Edge type = BSOL
p1: B_S [T]
p2: B_Y [T]
p3: 0 for entrance face, 1 for exit face
Edge type = FACE gives rotated pole faces
p1: pole face angle [deg]
p2: radius of curvature of reference particle [m]
p3: if not 0 => correct kick by the factor $1 / (1+\delta)$

If a FACE command is used before and after a sector dipole (DIP), you can approximate a rectangular dipole field.

ENDB

1) (I) file # of field output on the grid {20-99}. Set this <20 if you don't want an output file. See output file section 4.2.

(Command parameters continued)

GRID
This can be used to define a 2D r-z grid or a 3D x-y-s grid, depending on the value of the field type.

(1) r-z grid
1) grid number (I) {1-4}
2) field type (A4) { BLOCK , COIL , SHEET , USER}
3) field parameters (R) (enter 0. for unused parameters)
3.2) file # of input COIL , SHEET , etc. data {20-99}
If the file number is entered as a negative number, the current densities in the external file are all reversed in polarity. For the location of file formats look in model BLOCK(3), COIL(3), SHEET(3) or SOL(6).
3.3) dz for grid [m]
3.4) dr for grid [m]
3.5) total z length of grid [m]
3.6) total r length of grid [m]
3.7) z cut parameter for ignoring current elements (COIL and SHEET only)
3.9) file # for field output on the grid {20-99}
The format of the output file generated by parameter 9 is listed in section 4.2.
3.10) Longitudinal shift parameter. If a longitudinal grid index JZ is entered here, the field grid stored in memory starts at JZ, wraps through the beginning of the grid and ends at longitudinal index JZ-1.
3.11) Current element scaling factor. Set to 1.0 for no scaling.

(Command parameters continued)

(2) x-y-s grid

1) grid number (I)
2) field type (A4) { STUS }
3) field parameters (R) (enter 0. for unused parameters)
3.2) file # of input 3D field values or spline coefficients {20-99}

See file formats under STUS.

3.3) curvature flag
0: straight grid
1: curved grid
3.4) reference momentum [GeV/c]
3.5) field scaling factor Set to 1.0 for no scaling.
3.8) curvature sign flag
if parameter=1 => flip sign of HREF in input file
3.9) file format flag
0: formatted B grid
1: unformatted B grid
2: unformatted spline coefficients of B grid

For a curved grid (parameter 3.3 = 1): if href in the input file is not 0, then href is used as the constant curvature; if href in the input file is 0, then pref is used with the local Bx and By on-axis fields to determine the curvature.

3.10) Longitudinal shift parameter. If a longitudinal grid index JZ is entered here, the field grid stored in memory starts at JZ, wraps through the beginning of the grid and ends at longitudinal index JZ-1.

(Command parameters continued)

REFP

1.1) REFPAR (I) Use BMTYPE particle code to specify reference particle type or 0 if no reference particle. {0 - 5}(2) If set, this redefines t and Pz relative to the on axis reference particle in histograms, plots, and emittance calculations.

1.2) PZ0REF (R) start longitudinal momentum for reference particle [GeV/c]

1.3) T0REF (R) start time value for the reference particle [s] (0.)

1.4) GRADREF (R) average energy gradient seen by the reference particle in rf cavities for PHMODREF=4. [MeV/m]

1.5) PHMODREF (I) phase model

3: assumes constant reference particle velocity

4: takes into account energy loss in absorbers and gain in cavities

n.b. there is no for009.dat data generated for the reference particle in phasemodel=3.

REF2

1.1) REFPAR2 (I) Use BMTYPE particle code to specify reference particle type or 0 if no reference particle. {0 - 5}(2) If set, this redefines t and Pz relative to the on axis reference particle in histograms, plots, and emittance calculations.

1.2) PZ2REF (R) start longitudinal momentum for reference particle [GeV/c]

1.3) T2REF (R) start time value for the reference particle [s] (0.)

1.4) GRAD2REF (R) average energy gradient seen by the reference particle in rf cavities for PHMODREF=4. [MeV/m]

n.b. PZ2REF should not equal PZ0REF.

REPEAT

1) NREP (I) # of times to repeat following region commands

(Command parameters continued)

RKICK

1.1)	field type	(A4) {SOL, DIP, HDIP, QUAD, SQUA, SEX; SCAL}
1.2)	mean strength	(R) integrated multipole strength [$T / m^n * m$]
1.3)	σ (strength)	(R) [$T / m^n * m$]
1.4)	coupling parameter	(R)
1.5)	azimuth or length	(R)

This generates a random momentum kick based on the magnetic field configuration given in *field type*. The output of this command can be given for longitudinal fields (SOL) and transverse fields independently. The SCAL field type is used to scale the strengths of all following RKICK commands. In this case the 2nd parameter is a scaling factor for the mean values and the 3rd parameter is a scaling factor for the standard deviations, as follows.

SCAL mean_factor sigma_factor 0. 0.

The *coupling parameter* can be used to correlate RKICK commands. This parameter can have the following four values.

0: generate a random value
1: generate a random value and save it
2: used the saved random value
3: used the saved random value with the opposite sign

One value can be saved for longitudinal kicks and one value can be saved for transverse kicks. For solenoidal fields the 5th parameter is the solenoid length in meters. For transverse fields the 5th parameter determines the azimuthal angle around the beam direction in which the kick takes place. If the 5th parameter = -1, the kick direction is chosen randomly from a uniform distribution. Otherwise the kick direction is determined by the field type. The coupling parameter is also used here to correlate kick directions. The random kicks are only computed for NSECTIONS = 1. When NSECTIONS > 1 the same kick is applied at some given location as its kick for NSECTIONS = 1.

(Command parameters continued)

ROTATE

1.1) ANGLE (R) Rotation angle [degrees]
1.2) axis (I) {1,2,3}
1: x
2: y
3: z
1.3) apply to (I) {0,1,2}
0: all particles
1: reference particle only
2: normal particles only

This command can be used to make vertical bends, e.g.

```
ROTATE ! switch x and y coordinates
90.  3.  0.
SREGION ! usual horizontal bend region
...........
ROTATE ! switch x and y coordinates back
-90. 3.  0.
```

SREGION

1.1) SLEN (R) Length of this s region [m]
1.2) NRREG (I) # of radial subregions of this s region {1-4}
1.3) ZSTEP (R) step for pushing particles [m]

(following repeated for eachr subregion)

2.1) RREGN (I) r-region number
2.2) RLOW (R) Inner radius of this r subregion[m]
2.3) RHIGH (R) Outer radius of this r subregion[m]
3) FTAG (A4) Tag identifying field in this r subregion
(see specific field type below)
4) FPARM (R) 15 parameters describing field(see specific field type below)
These 15 parameters must be on one input line.
5) MTAG (A4) Tag identifying material composition in this r subregion
(see specific material type below)
6) MGEOM (A4) Tag identifying material geometry in this r subregion.
(see specific material type below)
7) GPARM (R) 10 Parameters describing material geometry.
These 10 parameters must be on one input line.
(see specific material type below)

TILT

1.1) PSI (R) σ of tilt angle distribution [deg]
1.2) PHI (R) angle of rotation w.r.t. x axis in x-y plane [deg]
If PHI = -1 => angle of rotation axis is chosen randomly from a uniform distribution.

(Command parameters continued)

TRANSPORT

1) 1st row of transport matrix (variables x, x', y, y', d(length), dp/p)
2) 2nd row of transport matrix,.....

6) 6th row of transport matrix

You must define a reference particle in order to use this command.

3. Field and material parameters

3.1 Field tags and parameters

Enter FTAG in UPPER case. Unused parameters should be set to 0.

NONE drift in field free region
(set all parameters to 0)

ACCE(L) linear accelerator fields
1 model

1:E_Z only with no transverse variation
2: cylindrical TM01p pillbox resonator
3: traveling wave cavity
4: approximate fields for symmetric circular-nosed cavity
5: user-supplied azimuthally-symmetric TM mode RF field
6: induction linac model - waveform from user-supplied polynomial coefficients
7: induction linac model - internally generated waveform
8: induction linac model - waveform from user-supplied file
9: sector-shaped pillbox cavity (circular cross section)
10: variable {frequency, gradient} pillbox cavity
11: straight pillbox cavity in dipole region
12: sector-shaped pillbox cavity (rectangular cross section)

The initial phase parameter can be used for any PHASEMODEL and ACCEL models 1-5. Phase offset parameters are only used for PHASEMODEL=2 and ACCEL models 1-4.

For **model = 1**
2 frequency [MHz]
3 gradient on-axis at center of gap [MV/m]
4 phase shift [deg] {0-360}. This is only applied to the first cavity in a string in phasemodel (PM) 2.
5 phase offset of (any) subsequent cavities in same cell [deg] (PM 2 only)
6 phase offset of (any) subsequent cavities in the same cell that have (PM 2 only) non-cavity regions separating them from a previous cavity [deg]
7 phase offset of first cavity in next cell (if any) [deg](PM 2 only)
8 mode

0 : time-independent
1: sinusoidal time variation

(ACCEL continued)

For **model = 2**
2 frequency f[MHz]
3 gradient on-axis at center of gap [MV/m]
4 phase shift [deg] {0-360}. This is only applied to the first cavity in a string in phasemodel (PM) 2.
5 phase offset of (any) subsequent adjacent cavities in same cell [deg]. (PM 2 only)
6 phase offset of (any) subsequent cavities in the same cell that have
non-cavity regions separating them from a previous cavity [deg]. (PM 2 only)
7 phase offset of first cavity in next cell (if any) [deg] (PM 2 only)
8 longitudinal mode p {0,1}
For mode = 0 Rcav = 0.383 * λ
For mode = 1 Rcav = 2.405 / {(2 pi f)^2 - (pi/SLEN)^2 }^1/2
For pi mode, set SLEN = /2 => Rcav -->inf

For **model = 3**
2 frequency f[MHz]
3 gradient on-axis at center of gap [MV/m]
4 phase shift [deg] {0-360}. This is only applied to the first cavity in a string in phasemodel (PM) 2.
5 phase offset of (any) subsequent cavities in same cell [deg] (PM 2 only)
6 phase offset of (any) subsequent cavities in the same cell that have
non-cavity regions separating them from a previous cavity [deg] (PM 2 only)
7 phase offset of first cavity in next cell (if any) [deg](PM 2 only)
8 phase velocity of RF wave β_W . $\{0 < \beta_W < 1\}$

For **model = 4**
2 frequency[MHz]
3 gradient on-axis at center of gap [MV/m]
4 phase shift [deg] {0-360}. This is only applied to the first cavity in a string in phasemodel (PM) 2.
5 phase offset of (any) subsequent cavities in same cell [deg] (PM 2 only)
6 phase offset of first cavity in next cell [deg] (PM 2 only)
7 phase offset of first cavity in next cell (if any) [deg](PM 2 only)
8 total length of cavity [m]
9 total gap [m]
10 radius of drift tube [m]
11 radius of nose piece [m]

(ACCEL continued)

For **model = 5**
2 frequency[MHz]
3 field strength normalization factor (1.)
4 phase shift [deg] {0-360}.
5 file ## of azimuthally symmetric RF input file (see below) {20-99}
6 radial extent of field grid [m]
7 half-length of cavity field grid[m]
8 # of radial Ez grid points in the file {<21}
9 # of axial Ez grid points in the file {<21}
10 # of radial Er grid points in the file {<21}
11 # of axial Er grid points in the file {<21}
12 # of radial Bphi grid points in the file {<21}
13 # of axial Bphi grid points in the file {<21}

The contents of the user-supplied file FOR0##.DAT is

title	
nrez,nzez	# of r and z grid points for Ez in the file
i,rez(i),i=1,nrez	radial grid values [m]
i,zez(i),i=1,nrez	axial grid values [m]
i,j,ez(i,j),i=1,nrez,j=1,nzez	Ez values [V/m]
nrer,nzer	# of r and z grid points for Er in the file
i,rer(i),i=1,nrer	radial grid values [m]
i,zer(i),i=1,nrer	axial grid values [m]
i,j,er(i,j),i=1,nrer,j=1,nzer	Er values [V/m]
nrbp,nzbp	# of r and z grid points for Bphi in the file
i,rbp(i),i=1,nrbp	radial grid values [m]
i,zbp(i),i=1,nrbp	axial grid values [m]
i,j,bphi(i,j),i=1,nrbp,j=1,nzbp	Bphi values [T]

It is assumed that the supplied grid is up-down and left-right symmetric. Axial distances are measured from the symmetry plane at the midpoint of the cavity. The grid describes the geometry in the first quadrant, i.e. both r and z have positive grid values. The E_Z grid starts with r=0 and with finite (non-zero) z. The E_R grid starts with z=0 and finite r. The B_{PHI} grid starts with finite values of both r and z. The grids should extend beyond the region where tracking will occur.

(ACCEL continued)

For **model = 6**

2 time offset from start of voltage pulse[s]
3 accelerator gap [m]
4 time reset parameter (see below)
5 V0 term in polynomial expansion of voltage pulse [V]
6 V1 term in polynomial expansion of voltage pulse [V / μs]
7 V2 term in polynomial expansion of voltage pulse [V / μs^2]
8 V3 term in polynomial expansion of voltage pulse [V / μs^3]
9 V4 term in polynomial expansion of voltage pulse [V / μs^4]
10 V5 term in polynomial expansion of voltage pulse[V / μs^5]
11 V6 term in polynomial expansion of voltage pulse[V / μs^6]
12 V7 term in polynomial expansion of voltage pulse[V / μs^7]
13 V8 term in polynomial expansion of voltage pulse[V / μs^8]

This model generates an E_Z field across the accelerator gap. The field is time dependent, but does not depend on z or r. The radial electric field and azimuthal magnetic fields are assumed to be negligible. When the time reset parameter is 1, the start time for the voltage pulse is determined from the time the reference particle entered the cell. The user can adjust this time using parameter #2 above. Subsequent cells should use parameter #8 set to 0 to sample later portions of
the same voltage pulse. A new pulse shape can be started at any time by setting parameter #8 back to 1.

For **model = 7**

2 number of gaps
3 starting voltage [GV]
4 voltage swing [GV]
5 time offset [s]
6 target kinetic energy [GeV]
7 pulse duration [s]
8 parameter to adjust slope at end of voltage pulse
9 number of bins in voltage pulse
10 gap length [m]
11 file # of output diagnostic file {20-99} (Set this <20 for no diagnostic output.)
12 kill particle flag (Set=1 to eliminate non-useful particles)
13 restart flag (Set =1 to restart calculation)

(ACCEL continued)

For **model = 8**

2 time offset from start of voltage pulse[s]
3 accelerator gap [m]
4 time reset parameter [s](see below)
5 file number of waveform input (see format below) {20-99}
6 polynomial interpolation order, 1=> linear, 2=>quadratic, etc. {1-3}
7 file # for output diagnostic file (see format below){20-99}
8 time increment between diagnostic outputs to file [s]

This model generates an E_Z field across the accelerator gap. The field is time dependent, but does not depend on z or r. The radial electric field and azimuthal magnetic fields are assumed to be negligible.

When the time reset parameter is 1, the start time for the voltage pulse is determined from the time the reference particle entered the cell. The user can adjust this time using parameter #2 above. Subsequent cells can use parameter #8 set to 0 to sample later portions of the same voltage pulse. A new pulse shape can be started at any time by setting parameter #8 back to 1.

The contents of the waveform input file FOR0##.DAT is

1) number of points N {1-100}

This is followed by N pairs

2) t(i) V(i) [s] [V]

An output diagnostic file is initialized for an induction linac region where the time reset parameter=1 and parameter 7 above is in the range {20-99}. Output occurs when the elapsed time from the previous output exceeds the increment given in parameter 8. Output continues for subsequent induction linac regions provided parameter 7 remains in the specified range. The contents of the file are

1) column id header
2) region particle z t Ez

(ACCEL continued)

For **model = 9**
2 frequency f[MHz]
3 gradient on-axis at center of gap [MV/m]
4 phase shift [deg] {0-360}. This is only applied to the first cavity in a string in phasemodel (PM) 2.
5 phase offset of (any) subsequent cavities in same cell [deg] (PM 2 only)
6 phase offset of (any) subsequent cavities in the same cell that have non-cavity regions separating them from a previous cavity [deg] (PM 2 only)
7 phase offset of first cavity in next cell (if any) [deg](PM 2 only)

For **model = 10**
2 (not used)
3 (not used)
4 phase shift [deg] {0-360}.
5 number of wavelengths separating the two reference particles
6 reset parameter (see below)
7 Total length L of buncher [m]
8 g0 [MV/m]
9 g1 [MV/m]
10 g2 [MV/m]
11 longitudinal mode p {0,1}
For mode = 0 Rcav = 0.383 * λ
For mode = 1 Rcav = 2.405 / {(2 pi f)^2 - (pi/SLEN)^2 }^1/2
For pi mode, set SLEN = /2 => Rcav -->inf
12 phase model
0: 0-crossing time set by t_{REFP}
1: 0-crossing time set by ½ * (t_{REFP} + t_{REF2})

This model can only be used with phasemodel=3,4. The cavity frequency is set using the number of wavelengths (parameter 5) and the time difference between the two reference particles. When the reset parameter is 1, the starting location of the buncher is determined from the current position of the reference particle. Subsequent ACCEL commands should use parameter #6 set to 0 to sample later portions of the gradient waveform, which is given by
G = g0 + g1*(z/L) + g2*(z/L)^2
A new pulse shape can be started at any time by setting parameter #6 back to 1.

(ACCEL continued)

For **model = 11**
2 frequency f[MHz]
3 gradient on-axis at center of gap [MV/m]
4 phase shift [deg] {0-360}.
5 radial offset of center of cavity from reference trajectory [m]
6 axial length of cavity [m] If this entered as 0, the program computes the largest pillbox cavity that fits in the sector shaped region

For **model = 12**
2 frequency f[MHz]
3 gradient on-axis at center of gap [MV/m]
4 phase shift [deg] {0-360}.
5 radial offset of center of cavity from reference trajectory [m]
6 cavity width [m]
7 cavity height [m]

BLOCK field made up from sum of fields from annular solenoidal current blocks
1 model
    1: exact field from single block
    2: exact field from sum of blocks in data file
    3: interpolate data file field points from predefined grid

For CELL fields repetition of a cell uses the same external file over and over. A new cell block can use a different external file.

For **model = 1**
2 z offset of center of block from start of region [m]
3 inner radius of block [m]
4 outer radius of block [m]
5 length of block [m]
6 current density [A / mm^2]
7 algorithm
    0: from numerical integration
    1: from series

For **model = 2**
2 file ##of block input (see below) {20-99}
11 current density scaling factor
If the file number is entered as a negative number, the current densities in the external file are all reversed in polarity.

For **model = 3**
2 grid ##of block field {1-4}
3 interpolation level {1-3}
    1: bi-linear
    2: bi-quadratic polynomial
    3: bi-cubic polynomial

The contents of the block data input file FOR0##.DAT is
    1 title (a80)
    2 NBLOCKS {1-1000}
(3-8 repeated for each block)
    3 block #
    4 relative z offset of this block [m]
    5 length of block [m]
    6 inner radius of block [m]
    7 outer radius of block [m]
    8 current density [A / mm^2]

BSOL bent solenoid

1 model

1: 1st order dependence for Bs and By
2: 3rd order dependence for Bs, By and g using dTANH(s)
3: user-supplied fields on-axis
4: user-supplied Fourier coefficients on-axis

For **model = 1**

2 peak value of Bs [T]
3 peak value of By [T]
4 (not used)
5 reference momentum [GeV/c]
6 quad component of dipole field [T/m]

The geometric curvature of the solenoid is equal to the radius of curvature of the reference particle in the dipole. Hard-edge field models can include the focusing effects of the missing fringe field by using EDGE commands before and after the hard-edge field region.

For **model = 2**

2 peak value of Bs [T]
3 peak value of By [T]
4 quad component of dipole field [T/m]
5 ref momentum [GeV/c]
6 central length of solenoid [m]
7 end length of solenoid [m]
8 attenuation length of solenoid [m] {>0}
9 central length of dipole and quad [m]
10 end length of dipole and quad [m]
11 attenuation length of dipole and quad [m]
12 constant offset for Bs [T]
13 curvature factor

$h = 1 / \rho_{geom}$ [m^{-1}]
0. => use local B_Y and B_X on axis

(BSOL continued)

For **model = 3**

2 file # of user-supplied input (see contents below) {20-99}
3 reference momentum [GeV/c]
4 (not used)
5 scale factor for Bs
6 scale factor for By
7 scale factor for g
8 curvature factor
$h = 1 / \rho_{geom}$ [m^{-1}]
0. => use local B_Y and B_X on axis

The sign of h in parameter 8 should correspond to the dipole field.

The contents of the input file FOR0##.DAT is

1 title (a80)
2 # of points {1-1000}

(3-6 repeated for each point)

3 s [m]
4 Bs [T]
5 By [T]
6 g [T/m]

The s grid should start at 0. Make the s grid at least 1 grid spacing longer than the actual size of the cell or the field will be 0 at the boundary points.

(BSOL continued)

For **model = 4**

2 file # of user-supplied input (see contents below) {20-99}
3 reference momentum [GeV/c]
4 order of field calculation {1-5}
5 curvature factor
$h = 1 / \rho_{geom}$ [m^{-1}]
0. => use local B_Y and B_X on axis
6 scale factor for solenoid field strength
7 scale factor for b_0 field strength
8 scale factor for a_0 field strength
9 scale factor for b_1 field strength
10 scale factor for a_1 field strength
11 scale factor for b_2 field strength
12 scale factor for a_2 field strength
13 scale factor for b_3 field strength
14 scale factor for a_3 field strength

The sign of h in parameter 5 should correspond to the dipole field. The 5th order calculation does not contain terms for bending out of the midplane.

(BSOL continued)

The contents of the input file FOR0##.DAT for model 4 is

1 title (a80)
2.1 period [m]
2.2 field strength for solenoid component [T]
2.3 field strength for b_0 component [T]
2.4 field strength for a_0 component [T]
2.5 field strength for b_1 component [T/m]
2.6 field strength for a_1 component [T/m]
2.7 field strength for b_2 component [T/m^2]
2.8 field strength for a_2 component [T/m^2]
2.9 field strength for b_3 component [T/m^3]
2.10 field strength for a_3 component [T/m^3]
2.11 field strength for b_4 component [T/m^4]
2.12 field strength for a_4 component [T/m^4]
2.13 field strength for b_5 component [T/m^5]
2.14 field strength for a_5 component [T/m^5]
3 maximum Fourier order {0-199}
4 2 nd title (a80)

(5 repeated for each order)

5.1 m order #
5.2 c_m coefficient for solenoid field
5.3 d_m coefficient for solenoid field
5.4 c_m coefficient for b_0 field
5.5 d_m coefficient for b_0 field
5.6 c_m coefficient for a_0 field
5.7 d_m coefficient for a_0 field
5.8 c_m coefficient for b_1 field
5.9 d_m coefficient for b_1 field
5.10 c_m coefficient for a_1 field
5.11 d_m coefficient for a_1 field
…
5.26 c_m coefficient for a_5 field
5.27 d_m coefficient for a_5 field

The form of the Fourier series used for each field component is

$$f(s) = \Sigma (c_m \mathrm{COS}(u) + d_m \mathrm{SIN}(u))$$

where $u = 2\pi ms / \lambda$.

COIL field made up from sum of fields from circular current loops
1 model

1: exact field from single loop
2: exact field from sum of loops in data file
3: interpolate data file field points from predefined grid

Models 2 and 3 can be used as CELL fields. Repetition of a cell uses the same external file over and over. A new cell block can use a different external file.

For **model = 1**
2 z offset of the coil from start of region [m]
3 radius a of coil [m]
4 currentI [A]
Baxis = mu_o I / 2a = 2 pi 10^-7 I / a

For **model = 2**
2 file ##of coil input (see below) {20-99}
If the file number is entered as a negative number, the current densities in the external file are all reversed in polarity.
11 current density scaling factor

For **model = 3**
2 grid ##of coil field {1-4}
3interpolation level {1-3}
1: bi-linear
2: bi-quadratic polynomial
3: bi-cubic polynomial
The contents of the coil input data file FOR0##.DAT is

1 title (a80)
2 NCOILS {1-1000}

(3-6repeated for each coil)

3 coil #
4 relative z offset of this coil [m]
5 radius of coil[m]
6 current[A]

DIP vertical sector dipole field

1 model

1: hard-edge dipole + multipole fields (3rd order)
2: dTANH(s) B_Y with higher multipoles (3rd order)
3: hard-edged combined function dipole
4: hard-edge dipole with adjustable pole face angles

For **model = 1**

2 dipole field strength [T]
3 (not used)
4 reference momentum [GeV/c]
5 quad strength [T/m]
6 sextupole strength [T/m^2]
7 octupole strength [T/m^3]

Hard-edge field models can include the focusing effects of the missing fringe field by using EDGE commands before and after the hard-edge field region.

For **model = 2**

2 dipole field strength [T]
3 curvature factor

$h = 1 / \rho_{geom}$ [m^{-1}]
0. => use local B_Y and B_X on axis

4 reference momentum [GeV/c]
5 dipole central length [m]
6 dipole end length [m]
7 dipole end attenuation length[m]
8 quadrupole field component [T / m]
9 sextupole field component [T / m^2]
10 quadrupole central length [m]
11 quadrupole end length [m]
12 quadrupole end attenuation length [m]
13 sextupole central length [m]
14 sextupole end length [m]
15 sextupole end attenuation length[m]

The sign of h in parameter 3 should correspond to the sign of the dipole field.

(DIP continued)

For **model = 3**

2 dipole field strength, b_0 [T]
3 field index, n
4 reference particle momentum, p_{REF} [GeV/c]
5 distance from machine center to reference circle, r_0 [m]
6 curvature factor
$h = 1 / \rho_{geom}$ [m^{-1}]
0. => use local B_Y and B_X on axis

The combined function dipole has a vertical field on axis given by

$B_{yo} = b_o \{r_o / r\}^n$

This model uses 8th order expansions in y/R to get the total Bx and By field components. The field is uniform in s. For FFAG magnets n is negative and the radius of curvature of the particle $= p_{REF} / (q\, b_o)$ is smaller than r_0.

For **model = 4**

2 dipole strength [T]
3 (not used)
4 reference momentum [GeV/c]
5 (not used)
6 (not used)
7 axial center position of dipole from start of region [m]
8 half axial length of dipole along reference trajectory [m]
9 entrance pole rotation angle [deg]
10 exit pole rotation angle [deg]
11 horizontal half width of aperture [m]
12 vertical half width of aperture [m]

A positive pole rotation angle means the edge closest to the center of curvature is decreased by the rotation (TRANSPORT convention). It is up to the user to be sure that the region length extends out as far as the rotated pole faces. Otherwise they will be truncated longitudinally.

FOFO solenoidal FOFO lattice element

1 model

1: linear end ramp in Bz(Br from div B = 0)

2: sinusoidal Bz with Bessel radial dependence

For **model = 1**

2 bmag [T] (amplitude of varying Bz)

3 bcen [T] (central offset value of varying Bz)

4 period [m]

5 offset from beginning of the cell or region [m]

offset = 0, Bz starts at bcen, rises to bmag at a quarter period, ...

offset=-period/4, Bz starts at bmag, falls to bcen at a quarter period,...

For **model = 2**

2 bmag [T] (amplitude of varying Bz)

3 bcen [T] (central offset value of varying Bz)

4 period [m]

5 offset from beginning of the cell or region [m]

offset = 0 starts at bcen

HDIP horizontal sector dipole field

1 model

1: hard-edge skew dipole plus multipoles (3rd order)

2: dTANH(s) BX with higher multipoles

For **model = 1**

2 a_0 dipole field strength [T]

3 (not used)

4 reference momentum [GeV/c]

5 a_1 quad strength [T/m]

6 a_2 sextupole strength [T/m^2]

6 a_3 octupole strength [T/m^3]

Hard-edge field models can include the focusing effects of the missing fringe field by using EDGE commands before and after the hard-edge field region.

For **model = 2**

2 dipole field strength [T]

3 (not used)

4 reference momentum [GeV/c]

5 dipole central length [m]

6 dipole end length [m]

7 dipole end attenuation length[m]

8 quadrupole field component [T / m]

9 sextupole field component [T / m^2]

10 quadrupole central length [m]

11 quadrupole end length [m]

12 quadrupole end attenuation length [m]

13 sextupole central length [m]

14 sextupole end length [m]

15 sextupole end attenuation length[m]

HELI(X) helical field

1 model

1: simple rotating dipole
2: helical current sheet
3: finite length helical winding
4: helical multipole with user-supplied coefficients

Models 2-4 are only defined for particle radius less than the radius of the helix.

For **model = 1**

2 dipole field strength [T]
3 helix period [m]
4 dipole entrance and exit taper length [m]
5 start value of solenoid field [T]
6 central value of solenoid field [T]
7 end value of solenoid field [T]
8 solenoid entrance taper length, L1 [m]
9 solenoid central length, L2 [m]
10 solenoid exit taper length, L3 [m]

The total length of the helix must be L1+L2+L3.

For **model = 2**

2 current [A]
3 helix radius [m]
4 helix period [m] Cannot be 0. The sign gives the orientation of the twist.
5 starting azimuthal orientation [degrees]
6 order {0,1,2}

0: helical winding
1: pure helical rotating dipole
2: pure helical rotating quadrupole

7 entrance and exit taper length for transverse field [m]
8 start value of solenoid field [T]
9 central value of solenoid field [T]
10 end value of solenoid field [T]
11 solenoid entrance taper length, L1 [m]
12 solenoid central length, L2 [m]
13 solenoid exit taper length, L3 [m]
14 soft edge attenuation length [m]
15 soft edge central length of helix [m]

The total length of the helix must be L1+L2+L3. The solenoid field can be not symmetric, but the transverse field tapering is done symmetrically. The soft edge is used if parmeter 14 is not zero.

(HELIX continued)

For **model = 3**

2	current [A]
3	helix radius [m]
4	helix period [m] Cannot be 0. The sign gives the orientation of the twist.
5	starting azimuthal orientation [degrees]
6	half-length of helix [m]
7	central length of solenoid [m]
8	end length of solenoid [m]
9	end length (ELEN) before start of helix [m]
10	(not used)
11	starting value of solenoid field [T]
12	solenoid value at start of central length [T]
13	solenoid value at end of central length [T]
14	ending value of solenoid field [T]

For **model = 4**

2	file # of user-supplied multipoles {20-99}
3	central length of solenoid [m]
4	end length of solenoid [m]
5	(not used)
6	(not used)
7	end type {0,1}
	0: infinite length
	1: dTANH(s) dependence of current
8	central length (CLEN)for helix end type 1 [m]
9	end length (ELEN) for helix end type 1 [m]
10	end attenuation length for helix end type 1 [m]
11	starting value of solenoid field [T]
12	solenoid value at start of central length [T]
13	solenoid value at endt of central length [T]
14	ending value of solenoid field [T]

The contents of the input file FOR0##.DAT is

1 title (a80)
2 period of helix [m] Cannot be 0. The sign gives the orientation of the twist.
3 radius of helix [m]
4 number of supplied moments {1-20}
(Bn(i), An(i)), i=1, nmoments

HORN magnetic (toroidal-like) horn

1 model

1: simple analytic model

2: sheet with user-supplied profile

For **model = 1**

2 minimum polar angle [deg]

3 maximum polar angle [deg]

4 current [A]

For **model = 2**

2 input file # {20-99} (see format below)

3 current [A]

The contents of the input file FOR0##.DAT is

1 title (a80)

2 npoints (I) {1-50}

3 (i, Zi, Ri,Ro, i=1,npoints) [cm]

n.b. Only one horn model can be active at one time. The z positions in the file are measured relative to the start of the region or cell.

KICK kickers and deflection cavities

1 model

1: TM210 rectangular deflection cavity

2: time-dependent transverse kicker

For **model = 1**

2 frequency [MHz]

3 gradient [MV / m]

4 phase [deg] {0-360}

5 width [m]

The width must be > λ. The length is taken from SLEN; height is computed from eigenvalue equation.

For **model = 2**

2 input file #{20-99} (see format below)

3 time offset from start of pulse [s]

4 polynomial interpolation order {1-3}

5 azimuthal orientation of B, φ [deg]

6 magnitude of B, b_0 [T]

7 slope, m {-1,1}

8 pulse width, τ [s]

9 B offset, b_{off} [T]

If the input file number is in the range {20-99} the magnetic field pulse as a function of time is taken from the input file. The input file should contain

# of following points

t [sec] b_0 [T] for each point

If an input file is not given, the pulse is computed analytically using parameters 6-9.

$$b(t) = b_{off} + b_0 \; m \; t \; / \; \tau$$

$$B_X = b \cos \varphi$$

$$B_Y = b \sin \varphi$$

Times are measured relative to the time the reference particle entres the kicker region.

QUAD quadrupole field

1 model

1: constant gradient over entire region (hard edge) (1st order)

2: dTANH(s) quad with sextupole

For **model = 1**

2 gradient strength [T/m] (+:focus horizontal, -:focus vertical)

For **model = 2**

2 gradient strength [T/m] (+:focus horizontal, -:focus vertical)

3 quad central length [m]

4 (not used)

5 quad end length [m]

6 quad end attenuation length [m]

7 sextupole strength [T/m^2]

8 sextupole central length [m]

9 sextupole end length [m]

10 sextupole end attenuation length [m]

ROD axial current carrying rod

1 model level

1:Bphi only, constant in z, all other 0

2:level 1 + linear end fringe field

3:level 2 + minimal nonlinearity in radial dependence

4: dTANH(s) model for Bphi

For **model = 1**

2 Bphi [T] at outer radius(note that sign of B causes focus or defocus)

3 radius of rod [m]

For **model = 2 or 3**

2 Bphi [T] at outer radius(note that sign of B causes focus or defocus)

3 radius of rod [m]

4 length of central region[m]

5 length of end field region[m]

For **model = 4**

2 Bphi strength [T]

3 radius of rod [m]

4 central length [m]

5 end length [m]

6 end attenuation length [m]

SEX sextupole field

1 model

1: hard edge field (2nd order)

2: dTANH(s) sextupole strength (3rd order)

For **model = 1**

2 sextupole strength [T/m^2]

For **model = 2**

2 sextupole strength [T/m^2]

3 central length [m]

4 (not used)

5 end length [m]

6 end attenuation length [m]

SHEET field made up from sum of fields from annular solenoidal current sheets
1 model

1: exact field from single sheet
2: exact field from sum of sheets in data file
3: interpolate data file field points from grid
4: interpolate data file field points from "moving" grid
5: interpolate field from predefined r-z grid

This field type is often used as a CELL field. Repetition of a cell uses the same external file over and over. A new cell block can use a different external file.

For **model = 1**
2 z offset of left edge of sheet from start of region [m]
3 radius of sheet [m]
4 length of sheet [m]
5 current density [A-turns/m]

For **model = 2**
2 file ##of sheet input {20-99} See model 3 for file definition.
If the file number is entered as a negative number, the current densities in the external file are all reversed in polarity.
11 current scaling factor
For backwards compatibility if this parameter is exactly 0, it is set to 1 by the program.

(SHEET continued)

For **model = 3**
2 file ##of sheet input (see below) {20-99}
If the file number is entered as a negative number, the current densities in the external file are all reversed in polarity.
3 grid dz [m] (# z grid points < 5000)
4 grid dr [m] (# r grid points < 100)
5 total z grid length [m]
6 total r grid length [m]
Make the z and r grids at least 1 grid spacing longer in each direction than the actual size of the cell or the field will be 0 at the boundary points.
7 cutoff length in z for including sheets [m]
This is the distance between the present location of the particle and the start of a sheet, after which you can ignore the sheet in the calculation. The intent is not to waste time calculating sources that are very far away.
8 interpolation level
1: bi-linear
2: bi-quadratic polynomial
3: bi-cubic polynomial
9 file ## of field output on the grid {20-99}
Set this <20 if you don't want the output file. The file format is given in section 4.2.
10 grid calculation suppression parameter{0,1}
Normally leave this set to 0. If it is set to 1, the fields on the grid will not be recomputed.
11 current scaling factor
For backwards compatibility if this parameter is exactly 0, it is set to 1 by the program.

Don't allow grid points to overlap sheet positions. A SHEET field using a grid cannot be superimposed on a COIL or BLOCK field that also uses a grid.
The contents of the sheet data input file FOR0##.DAT is

1 title (a80)
2 NSHEETS {1-1000}
3 current scaling factor

(4-8repeated for each sheet)

4 sheet #
5 relative z offset of this sheet[m]
6 length of sheet [m]
7 radius of sheet [m]
8 current density [A-turns/m]

The format of the output file generated by parameter 9 is listed in section 4.2.4.

(SHEET continued)

For **model = 4**

2 file ## of field output on grid {20-99} Set this < 20 if you don't want output file. Format of file is described in sec. 4.2.4.

3 interpolation level

1: bi-linear
2: bi-quadratic polynomial
3: bi-cubic polynomial

Use of this model requires the user to specify the control variables MAGCONF and MAPDEF. The MAGCONF variable specifies the magnet configuration file with the following format.

1 title (a80)
2 # of following solenoid magnet descriptions (I) {1-1000}
(3- 9 repeated for each magnet)
3 id # (I) for user convenience
4 absolute z location of the start of this solenoid (R) [m]
5 length of solenoid (R) [m]
6 inner radius of solenoid (R) [m]
7 radial thickness of solenoid (R) [m]
8 current density (R) [A / mm^2]
9 # of sheets to use in calculating the field (I) {>1}

The MAPDEF variable specifies grid configuration file to use in the simulation with the following format.

1 title (a80)
2 # of following grid definitions (I) {1-100}
(3- 9 repeated for each grid)
3 id # (I) for user convenience
4 absolute z location of the start of the grid (R) [m]
5 axial length of grid (R) [m]
6 # of axial grid points (I) {2-5000}
7 radial length of grid (R) [m]
8 # of radial grid points (I) {2-100}
9 axial distance to start of solenoid coils within which coils should be used in field calculations (R) [m]

Make the z and r grids at least 1 grid spacing longer in each direction than the actual size of the cell or the field will be 0 at the boundary points.

(SHEET continued)

For **model = 5**
2 grid ##of sheet field {1-4}
3 interpolation level {1-3}
1: bi-linear
2: bi-quadratic polynomial
3: bi-cubic polynomial

SOL solenoid field

1 model level

1: Bz with constant central region + linear ends
2: dTANH(z) Bz dependence
3: field from sum of circular current loops
4: field from annular current sheet
5: field from thick annular current block
6: interpolate field from predefined USER r-z grid

For **model = 1**
2 field strength [T]
3 length of central region, CLEN[m] (You can use this to get a tapered field profile)
4 length for end region, ELEN [m] (This is the displacement of the upstream end of the solenoid from the start of the region; for a symmetric field, set SLEN = CLEN + 2*ELEN.)
5 constant offset for Bz [T]
Use parameter 5 to get an indefinitely long, constant solenoidal field.
Hard-edge field models can include the focusing effects of the missing fringe field by using EDGE commands before and after the hard-edge field region.

For **model = 2**
2 field strength [T]
3 length of central region, CLEN[m]
4 length for end region, ELEN [m] (This is the displacement of the upstream end of the solenoid from the start of the region; for a symmetric field, set SLEN = CLEN + 2*ELEN.)
5 order of vector potential expansion {1, 3, 5, 7}
6 end attenuation length, [m] (Set larger than maximum beam size)
7 constant offset for Bs [T]

For **model = 3**
2 field strength [T]
3 length of central region, CLEN[m] (This is the region over which the coils are distributed)
4 length for end region, ELEN[m] (This is the displacement of the upstream end of the solenoid from the start of the region; for a symmetric field, set SLEN = CLEN + 2*ELEN.)
5 # of coils loops (equi-spaced over CLEN)
6 radius of coils [m]
For a symmetric field with 1 loop, set ELEN=0.5 SLEN.

(SOL continued)

For **model = 4**
2 field strength [T]
3 length of sheet [m]
4 z offset of center of sheet from start of region [m]
5 radius of sheet [m]

For **model = 5**
2 field strength [T]
3 length of block [m]
4 z offset of center of block from start of region [m]
5 inner radius of block [m]
6 outer radius of block[m]

For **model = 6**
2 grid ##of user-supplied field {1-4}
3 interpolation level {1-3}
1: bi-linear
2: bi-quadratic polynomial
3: bi-cubic polynomial

The required format of the field map is

title	(A80)	
# of z grid points	(I)	{1-5000}
# of r grid points	(I)	{1-100}
i, j, z_i, r_j, $BZ_{i,j}$, $BR_{i,j}$	(I, R)	

SQUA skew quadrupole field

1 model

1: constant gradient over entire region (hard edge) (1st order)

2: dTANH(s) quad only (3rd order)

For **model = 1**

2 gradient strength [T/m] (+:focus horizontal, -:focus vertical)

For **model = 2**

2 gradient strength [T/m] (+:focus horizontal, -:focus vertical)

3 central length [m]

4 (not used)

5 end length [m]

6 end attenuation length [m]

STUS User supplied, static 3D magnetic field grid

1 model level
    1: set up 3D grid at this location in ICOOL command stream
    2: use 3D grid predefined with GRID command

For **model = 1**
2 file ## of input field grid(see below) {20-99}
3 curvature flag
    0: straight grid
    1: curved grid
4 reference momentum(pref) [GeV/c]
5 field strength normalization factor (R)
6 interpolation model {0-3}
    0: simple linear
    1: spline
    2: quadratic polynomial
    3: cubic polynomial
7 grid calculation suppression parameter{0,1}
Normally leave this set to 0. If it is set to 1, the fields on the grid will not be recomputed.
8 curvature sign flag if parameter=1 => flip sign of HREF in input file
9 file format flag
    0: formatted B grid
    1: unformatted B grid
    2: unformatted spline coefficients of B grid
10) Longitudinal shift parameter. If a longitudinal grid index JZ is entered here, the field grid stored in memory starts at JZ, wraps through the beginning of the grid and ends at longitudinal index JZ-1.

This command can also be used to input a user-supplied field to a background field definition. It is used as a field type argument for the BFIELD command.

For **model = 2**
2 interpolation model {0-3}
    0: simple linear
    1: spline
    2: quadratic polynomial
    3: cubic polynomial
3 curvature flag
    0: straight grid
    1: curved grid

The grid points must be equally spaced in a given direction. For BACKGROUND fields the value of MXG must agree with the parameter NXBKG of the BACKGROUND command, etc.

For a curved grid (parameter 3 = 1): if href in the input file is not 0, then href is used as the constant curvature; if href in the input file is 0, then pref is used with the local Bx and By on-axis fields to determine the curvature.

For file formats 0 and 1 the contents of the user supplied field file FOR0##.DAT is

title	(a80)	
mxg	(I)	number of x grid points {<101}
myg	(I)	number of x grid points {<101}
mzg	(I)	number of x grid points {<501}
href	(R)	curvature [m^{-1}]
(xgr(i),i=1,mxg)	(R)	x grid points [m]
(ygr(i),i=1,myg)	(R)	y grid points [m]
(zgr(i),i=1,mzg)	(R)	z grid points [m]
i j k Bx By Bz	(I,R)	x-index, y-index, z-index, corresponding field values [T]

The i variable changes most rapidly, then the j variable, then the k variable.

For file format 2 the contents of the user supplied spline coefficient file FOR0##.DAT is

title	(a80)	
mxg	(I)	number of x grid points {<101}
myg	(I)	number of x grid points {<101}
mzg	(I)	number of x grid points {<501}
href	(R)	curvature [m^{-1}]
(xgr(i),i=1,mxg)	(R)	x grid points
(ygr(i),i=1,myg)	(R)	y grid points
(zgr(i),i=1,mzg)	(R)	z grid points
nbf(3)	(I)	# of spline basis functions
nord(3)	(I)	spline orders
sknot	(R)	array containing knot sequences
cbx	(R)	array of spline coefficients for Bx
cby	(R)	array of spline coefficients for By
cbs	(R)	array of spline coefficients for Bs

TROD tapered current-carrying rod
n.b. can be used to eliminate end field regions for matching
1 model level (not used)
2 Bc [T] (flat central field strength; sign is important!)
3 Rc [m] (flat central rod radius)
4 Lc [m] (central field length)
5 R1 [m] (starting rod radius)
6 L1 [m] (length of entrance transition region)
7 R2 [m] (ending rod radius; set to Rc to prevent /0)
8 L2 [m] (length of exit transition region; set to 0.01 to prevent /0)

TSOL tapered solenoidal field
n.b. can be used to eliminate end field regions for matching
1 model level (not used)
2 Bc [T] (flat central field strength)
3 Rc [m] (flat central coil radius)
4 Lc [m] (central field length)
5 B1 [T] (starting field strength)
6 R1 [m] (starting coil radius)
7 L1 [m] (length of entrance transition region)
8 B2 [T] (ending field strength)
9 R2 [m] (ending coil radius)
10 L2 [m] (length of exit transition region)

WIG helical wiggler field

1 model level
1: helical multipole fields with linear ramp in solenoid and wiggler fields
2: helical dipole field with hyperbolic tangent ramp
2 length of central region, CLEN[m]
3 length for edge region for ramp, ELEN [m]
4 wiggler period [m].This cannot be 0, >0 => right hand twist, <0 => left hand twist.

For **model = 1**
5 ramp in solenoid field [T]
6 constant solenoid field [T]
7 field ramp for helical dipole [T]
8 uniform field for helical dipole[T]
9 phase offset for helical dipole, phi0 [deg]
10 field ramp for helical quadrupole [T/m]
11 uniform field for helical quadrupole [T/m]
12 phase offset for helical quadrupole, phi0 [deg]
13 field ramp for helical sextupole [T/m^2]
14 uniform field for helical sextupole [T/m^2]
15 phase offset for helical sextupole, phi0 [deg]

For **model = 2**
5 length scale for field ramp, LAMB [m]
6 ramp in solenoid field [T]
7 constant solenoid field [T]
8 ramp in wiggler field [T]
9 constant wiggler field [T]
10 phase offset, PHI0 [deg]

RAMP is given by the average of two TANH functions, one going from -1 to 1 with zero at z=ELEN, the other going from 1 to -1 with zero at z=ELEN+CLEN, both having scale length LAMB. When the phase shift PHI0=0 => the field component is in the y direction at z=0.

3.2 Material tags and parameters

MTAG (A) material composition tag

Enter MTAG in upper case.

VAC vacuum (i.e., no material)
GH gaseous hydrogen
GHE gaseous helium
LH liquid hydrogen
LHE liquid helium
LI BE B C AL TI FE CU W HG PB (elements)
LIH lithium hydride

MGEOM (A) material geometry tag
GPARM (R) 10 parameters that describe the geometry of the material.
These 10 parameters must be on one input line.

Enter MGEOM in upper case. Set unused parameters to 0.

NONE use for vacuum
10*0.

CBLOCK cylindrical block
10*0.

n.b. the program tracks thru any of the following types of wedge region with fixed step sizes, regardless of the value of the parameter VARSTEP.

3.2 Geometry tags and parameters

ASPW Azimuthally Symmetric Polynomial Wedge absorber region

Edge shape given by
r(dz) = a0 + a1*dz + a2*dz^2 + a3*dz^3 in the 1st quadrant and
where dz is measured from the wedge center.
1 z position of wedge center in region [m]
2 z offset from wedge center to edge of absorber [m]
3 a0 [m]
4 a1
5 a2 [m^(-1)]
6 a3 [m^(-2)]

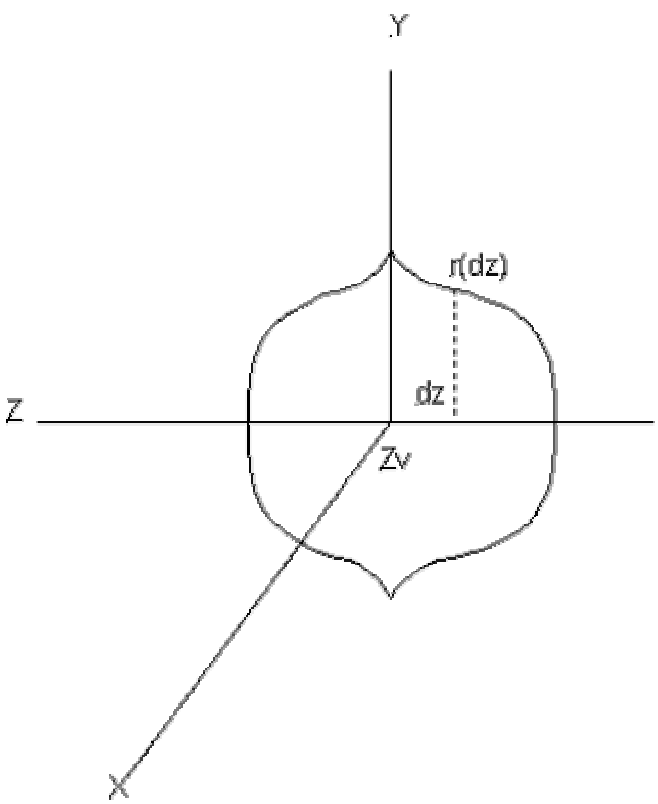

ASRW Axi-Symmetric Radial Wedge absorber region

Edge shape given by
dz(r) = a0 + a1*r + a2*r^2 + a3*r^3
This is the half-thickness of the wedge. The wedge is symmetric about the x-y plane located at z=ZV.
The wedge material is filled in from z=ZV-dz to z=ZV+dz at any given radius.

1 distance of symmetry x-y plane from beginning of region, ZV [m]
This is typically half the thickness of the s-region. If =0=> left half of wedge is cut off.
2 maximum half-thickness of wedge along z [m] Needs to be > 0.
3 a0 [m]
4 a1
5 a2 [m^(-1)]
6 a3 [m^(-2)]

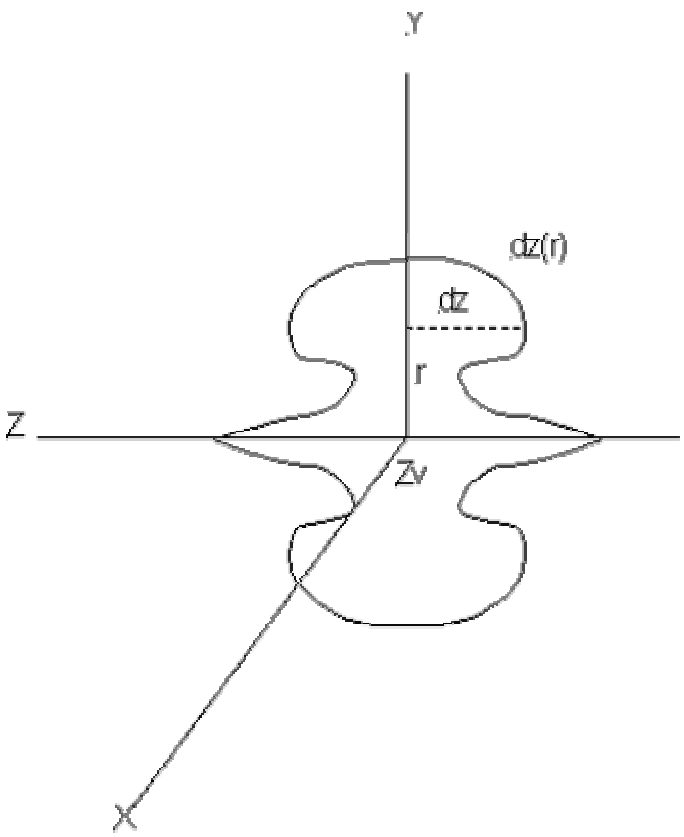

HWIN hemispherical absorber end region

1	end flag {-1: entrance, +1: exit}
2	inner radius of window[m]
3	window thickness [m]
4	axial offset of center of spherical window from start of end region [m]

The user must specify three "radial" subregions. The geometry parameters (above) and the maximum cylindrical radial cut off are taken from the first radial region definition. The material specified in the first radial subregion is the absorber, the material in the second is the window, and the material for the third corresponds to the outside of the window, e.g. vacuum.

Example

```
SREGION ! hemishperical end region (exit)
0.100  5 30.001
1 0.0.173
NONE
0. 0. 0. 0. 0. 0. 0. 0. 0. 0. 0. 0. 0. 0. 0.
LH !LH
HWIN
1. 0.20  500e-6 0.10 0. 0. 0. 0. 0. 0.
2 0. 0.173
NONE
0. 0. 0. 0. 0. 0. 0. 0. 0. 0. 0. 0. 0. 0. 0.
AL
HWIN
0. 0. 0. 0.0. 0. 0. 0. 0. 0.
3 0. 0.173
NONE
0. 0. 0. 0. 0. 0. 0. 0. 0. 0. 0. 0. 0. 0. 0.
VAC
HWIN
0. 0. 0. 0.0. 0. 0. 0. 0. 0.
```

NIA Non-isosceles absorber

1	z_V	distance of wedge "center" from start of region [m]
2	z_0	distance from center to left edge [m]
3	z_1	distance from center to right edge [m]
4	θ_0	polar angle from vertex of left edge [deg]
5	φ_0	azimuthal angle of left face [deg]
6	θ_1	polar angle from vertex of right edge [deg]
7	φ_1	azimuthal angle of right face [deg]

For description see S. Berg, MC note 261, October 2002.

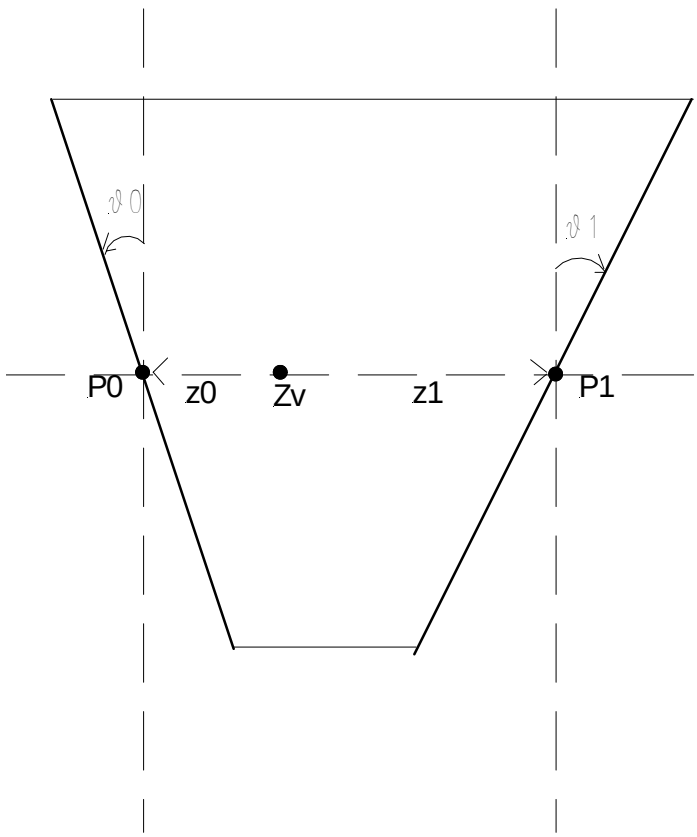

PWEDGE Asymmetric polynomial wedge absorber region

Imagine the wedge lying with its narrow end along the x axis. The wedge is symmetric about the x-y plane. The edge shape is given by
dz(x) = a0 + a1*x + a2*x^2 + a3*x^3
where dz is measured from the x axis.

1 (not used)
2 initial position of the vertex along the x axis [m]
3 z position of wedge vertex [m]
4 azimuthal angle of vector pointing to vertex in plane of wedge w.r.t. +ve x-axis [deg]
5 total width of wedge in dispersion direction [m]
6 total height of wedge in non-dispersion direction [m]
7 a0
8 a1
9 a2
10 a3

Assume the wedge is initially positioned with the vertex along the x axis (parameter 2). The wedge is then rotated azimuthally (parameter 4) in the x-y plane to its final position.

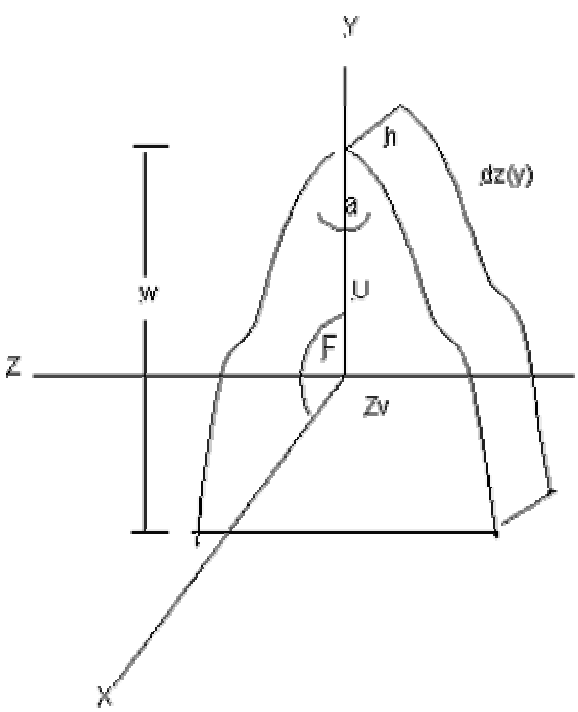

RING Annular ring of material

1 inner radius (R) [m]
2 outer radius (R) [m]

This is functionally equivalent to defining a region with two radial subregions, the first of which has vacuum as the material type. However, the boundary crossing algorithm used for RING is more sophisticated and should give more accurate simulations.

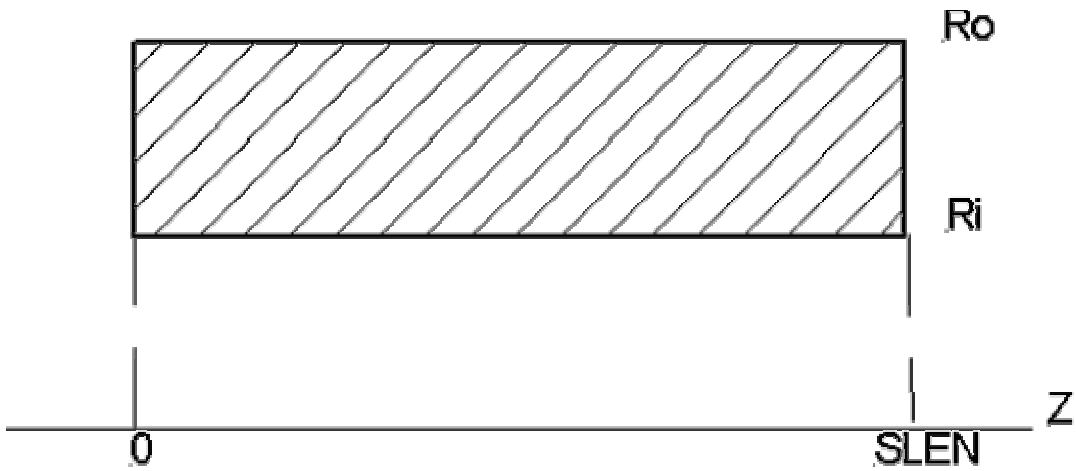

WEDGE Asymmetric wedge absorber region

1 full angle at vertex, α (or A) [degrees]
2 initial position of the vertex along the x axis, U [m]
3 z position of wedge vertex, Zv [m]
4 azimuthal angle φ of vector pointing to vertex in plane of wedge w.r.t. +ve x-axis [deg]
5 total width of wedge in dispersion direction, w [m]
6 total height of wedge in non-dispersion direction, h [m]

"We begin with an isosceles triangle, sitting on its base, vertex at the top. The base-to-vertex distance is W. The full opening angle at the vertex is A.Using two of these triangles as sides, we construct a prism-shaped wedge. The distance from one triangular side to the other is H. The shape and size of the wedge are now established. We define the vertex line of the wedge to be the line connecting the vertices of its two triangular sides.

Next, we place the wedge in the right-handed ICOOL coordinate system. The beam travels in the +Z direction. Looking downstream along the beamline (+Z into the page), +X is horizontal and to the left, and +Y is up.

Assume the initial position of the wedge is as follows: The vertex line of the wedge is vertical and lies along the Y axis, extending from Y = -H/2 to Y = +H/2. The wedge extends to the right in the direction of -X, such that it is symmetric about the XY plane. (Note that it is also symmetric about the XZ plane.) From the beam's point of view, particles passing on the +X side of the Y axis will not encounter the wedge, while particles passing on the -X side of the Y axis see a rectangle of height H and width W, centered in the Y direction, with Z thickness proportional to -X.

By setting parameter U to a non-zero value, the user may specify that the wedge is to be translated in the X direction. If U>0, the wedge is moved (without rotation) in the +X direction. For example, if U = W/2, then the wedge is centered in the X direction; its vertex is at X = W/2 and its base is at X = -W/2. Note that the wedge is still symmetric about both the XY plane and the XZ plane.

Next, the wedge may be rotated about the Z axis by angle PHI. Looking downstream in the beam direction, positive rotations are clockwise and negative rotations are counter-clockwise. For example, setting PHI to 90 degrees rotates the wedge about the Z axis so that its vertex line is parallel to the X axis and on top, while its base is parallel to the XZ plane and at the bottom. In general this rotation breaks the symmetry about the XZ plane, but the symmetry about the XY plane is maintained.

Finally, the wedge is translated in the Z direction by a distance Zv, so that its XY symmetry plane lies a distance Zv downstream of the start of the region. Usually Zv should be at least large

(WEDGE continued)

enough so that the entire volume of the wedge lies within its region, i.e. Zv .ge. W tan (A/2), the maximum Z half-thickness of the wedge. As well, the region usually should be long enough to contain the entire volume of the wedge, i.e. RegionLength .ge. Zv + W tan (A/2). Wedges that do lie completely within their region retain their symmetry about the XY plane Z=Zv.

If portions of a wedge lie outside their region in Z, then the volume of the wedge lying outside the region is ignored when propagating particles through the wedge. Such a wedge will grow in thickness until it reaches the region boundary, but will not extend beyond it. In such cases, wedges may lose their symmetry about the XY plane Z=Zv.

Wedges may be defined such that they extend outside the radial boundaries of the radial subregion within which they are defined. However, any portion of the wedge volume lying inside the inner radial boundary or outside the outer radial boundary is ignored when propagating particles through the wedge. For example, if the user intends that an entire radial subregion of circular cross-section be filled with a wedge, then it is clear that the corners of the wedge must extend outside the radial region, but particles passing outside the wedge's radial subregion will not see the wedge at all.

In short, we may say that although it is permitted (and sometimes essential) to define a wedge to be larger than its subregion, for the purposes of particle propagation the wedge is always trimmed at the region's Z boundaries and the subregion's radial boundaries. Any volume within the region and subregion that is not occupied by the material specified for the wedge is assumed to be vacuum.

Example 1: Within a region 0.4 meters long in Z, within a radial subregion extending from the Z
axis out to a radius of 0.3 meters, a wedge is to fill the X<0 (right) half of the 0.3 meter aperture of the subregion, and increase in Z thickness proportional to -X, such that it is 0.2 meters thick at the rightmost point in the subregion (X=-0.3, Y=0).

The wedge is to be 0.2 meters thick at a point 0.3 meters from its vertex. The half-thickness is 0.1 meters, the half-opening angle is atan (0.1/0.3) = 18.4 degrees, so the full opening angle of the wedge A is 36.8 degrees. The width (X extent) of the wedge must be 0.3 meters, and the height (Y extent) of the wedge must be 0.6 meters. Two corners of the wedge extend well beyond
the subregion, but they will be ignored during particle propagation. The wedge does not need to be translated in X (U = 0) nor does it need to be rotated about the Z axis (PHI = 0). For convenience we center the wedge (in Z) within its region, so Zv = 0.2 meters. Since the maximum half-thickness of the wedge is only 0.1 meters, the wedge does not extend beyond (or even up to) the Z boundaries of the region. The volume within the region and subregion but outside the wedge is assumed to be vacuum.

(WEDGE continued)

Example 2: In the same region and subregion, we need a wedge with the same opening angle, but filling the entire aperture of the subregion, thickness gradient in the +Y direction, thickness = 0 at the lowest point in the subregion (X=0, Y=-0.3).

The wedge must now have H = W = 0.6 meters so it can fill the entire aperture of the subregion. From its initial position, it must first be translated 0.3 meters in the +X direction (U = 0.3) to center it in the subregion's aperture, and then (from the perspective of someone looking downstream along the beam) rotated counterclockwise 90 degrees (PHI = -90.) so that the Z thickness increases proportionally to +Y. Since the wedge has the same opening angle as before but has twice the width, its maximum Z thickness is now 0.4 meters, just barely fitting between the Z boundaries of the region if Zv = 0.2 meters. All four corners of the wedge now extend outside the radial subregion's outer boundary, but they will be ignored during particle propagation." {S.B.}

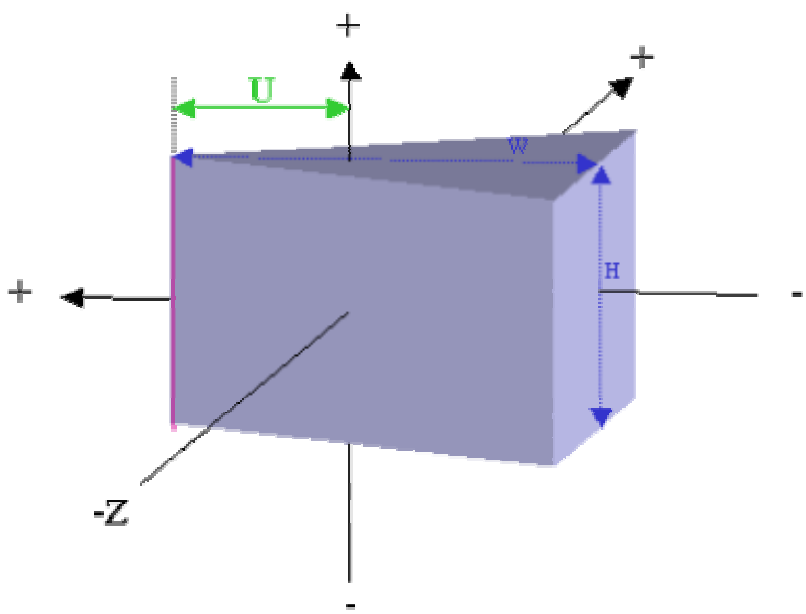

4. Other files

4.1 Input files

4.1.1 FOR003.DAT Beam input data
This optional file can be used to start a simulation using previously defined beam data.

Title card (A79)

Reference particle data: ZBREF,PBREF,TBREF,ZB2REF, PB2REF, TB2REF,TYPREF. (R) {ZB, PB, TB} refer to the z position [m], momentum [GeV/c] and time [s] for the reference particle (and for e second reference particle if present). TYPREF is the particle code for the type of particle (cf. sec. 2.4).

For a new problem set this card to seven 0. fields.

This is followed by an indefinite number of incident particles, each with the following data.

(1) IEVT (I) event #(increase sequentially from 1)
(2) IPNUM (I) particle # for this event (set to 1)
(3) IPTYP (I) particle type code (see BMTYPE in sec. 2.4)
(4) IPFLG (I) particle status flag (set to 0)
(5) TP (R) time [s]
(6) EVTWT (R) event weight (set to 1.)
(7) XP(i),i=1,3 (R) cartesian position [m] (set xp(3)=0.)
(8) PP(i),i=1,3 (R) cartesian momentum [GeV/c]
(9) POL(i),i=1,3 (R) cartesian spin vector
For muons from pion decay this vector should correspond to the muon rest frame if spin tracking is to be done.

4.1.2 Optional files can be used to define the magnetic field on an r-z grid. See BLOCK, COIL, SHEET and SOLENOID (USER) for descriptions of the file formats.

4.1.3 Optional file can be used to set the parameters of RF cavities using the control variable RFPHASE.

The following is repeated for every RF cavity region.
(1) ID (I) ICOOL region number of the rf cavity
(2) PHASERF (R) cavity phase[degrees]
(3) FRF (R) cavity frequency [MHz]
(4) GRADRF (R) cavity peak electric field on-axis [MV/m]

4.2 Output files

4.2.1 FOR002.DAT program LOG file

This file is always created. It can consist of:

1. print out of input variables used
2. summary table of region properties
3. diagnostic print out of particle position, momentum, spin, and fields (optional)
4. identification of tracks that fail to reach end of the simulation
5. transverse and longitudinal emittances at specified planes (optional)
6. histogram statistics (optional)
7. scatterplot statistics (optional)
8. covariance of particle distributions at specified planes (optional)
9. character histogram of desired quantities (optional)
10. character scatterplot of desired quantities (optional)
11. Z-history (trace) of desired quantities (optional)
12. elapsed time for simulation

4.2.2 FOR004.DAT Beam information after a specified region

This optional file contains particle information in the same format as described for file FOR003.DAT above.

(Output files continued)

4.2.3 FOR009.DAT postprocessor data file

This file contains information about each of the particles at production and at various z locations under the user's control. This file is generated using the OUTPUT pseudocommand or the control variables OUTPUT1, NTUPLE and RTUPLE.

Title card (A79)

This is followed by particle information at requested positions.

1) IEVT	(I) event #
2) IPNUM	(I) particle # for this event
3) IPTYP	(I) particle type code (see BMTYPE in sec. 2.2)
4) IPFLG	(I) particle status flag
5) JSRG	(I) ICOOL region #
6) TP	(R) time [s]
7) XP(i),i=1,3	(R) position [m]
8) PP(i),i=1,3	(R) cartesian momentum [GeV/c]
9) BFLD(i),i=1,3	(R) total magnetic field [T]
10) EVTWT	(R) event weight
11) EFLD(i),i=1,3	(R) total electric field [V/m]
12) SARC	(R) total arclength [m]
13) POL(i),i=1,3	(R) spin

For muons from pion decay POL(3) contains the helicity in the LAB frame when SPIN=true and SPINTRK=0.

4.2.4 An optional file can be created of the cylindrically symmetric field generated by current blocks, coils or sheets. This file can be made using the GRID command or SHEET model 3. The contents of the field map is

title	(A80)	
# of z grid points	(I)	{1-5000}
# of r grid points	(I)	{1-100}
i, j, z_i, r_j, $BZ_{i,j}$, $BR_{i,j}$	(I, R)	

Note that the z locations in this file are specified relative to the position where the current field definition was made, i.e. they are not absolute z locations.

(Output files continued)

4.2.5 An optional 3D magnetic field grid file can be created using the BACKGROUND command. The format of the file is

title	(A80)
nx, ny, nz, hcurv	(I, R) # of x, y, z grid points; curvature [m]
xgr_i, i=1,nx	(R)
ygr_j, j=1,ny	(R)
zgr_k, k=1,nz	(R)
i, j, k, $BX_{i,j,k}$, $BY_{i,j,k}$, $BZ_{i,j,k}$	(I, R)

Note that the z locations in this file are specified relative to the position where the current field definition was made, i.e. they are not absolute z locations.

4.2.6 An optional file can be produced of RF diagnostics at the end of every acceleration region. (See the control variable RFDIAG.)

(1) JSRG	(I)	region number
(2) id	(I)	event number
(3) d(phase)	(R)	difference (particle-reference) phase at cavity center
(4) dt	(R)	difference (particle-reference) time at cavity center
(5) dPz	(R)	difference (particle-reference) Pz at cavity center
(6) f	(R)	rf frequency [Hz]
(7) G	(R)	gradient [V/m]
(8) PHASERF	(R)	cavity phase [degrees]
(9) EZRF	(R)	cavity Ez [V/m]
(10) BPHIRF	(R)	cavity Bphi [T]
(11) TREFMEAN	(R)	zero crossing time of reference particle at center of preceding cavity [s]
(12) T2REFMEAN	(R)	zero crossing time of 2 nd reference particle at center of preceding cavity [s]
(13) Z	(R)	Z for particle at center of cavity [m]
(14) dt	(R)	difference (particle-reference) time at cavity end
(15) dPz	(R)	difference (particle-reference) Pz at cavity end

(Output files continued)

4.2.7 Neutrino production data

This data appears on the file specified by the control variable NEUTRINO.

Title record	(A)
Problem title	(A80)

For each neutrino satisfying the polar angle cuts:

1) IEVT	(I) event #
2) IPNUM	(I) particle # for this event
3) IPTYP	(I) particle type code
4) IPFLG	(I) particle status flag
5) JSRG	(I) ICOOL region #
6) TP	(R) time [s]
7) XP(i),i=1,3	(R) position [m]
8) PP(i),i=1,3	(R) cartesian momentum [GeV/c]
9) EVTWT	(R) event weight

The particle type uses the following code

6	muon neutrino
-6	muon antineutrino
7	electron neutrino
-7	electron antineutrino
±20	from muon decay
±30	from pion decay
±40	from kaon decay

e.g. IPTYP = -36 for a muon antineutrino from pion decay

(Output files continued)

4.2.8 Beam moments

Problem title (A80)

At each OUTPUT command

1) region number
2) Bz [T]
3) t [s]
4) Pz [GeV/c]
5) normalized transverse emittance [m rad]
6) Courant-Snyder beta [m]
7) Courant-Snyder alpha
8) angular momentum
9) particle number
10) transverse scraping parameter
11) normalized longitudinal emittance [m rad]

4.3 Internal program files

(1) FOR007.DAT region data file

This unformatted, direct access file contains region data used by the program.

(2) FOR008.DAT particle overflow data file

This unformatted, direct access file contains particle data used by the program. It is only created when the number of requested particles is greater than 50000.

5. Program execution flags

0 No errors.
-1 Fatal error (with message on the log file)
-10 particle outside dipole aperture
-11 got unphysical momentum from dipole edge focusing
-12 negative argument for SQRT {DERIV]
-13 error setting angular momentum correlation
-14 got unphysical momentum computing random field kick
-23 Particle radius not in defined r-region.
-25 Illegal LOG argument [DEDX]
-27 Illegal LOG argument [SCATTER]
-28 Particle outside an aperture [SIMULATE]
-29 Particle came to rest
-31 exceeded allowed radius [TAPSOL]
-32 Vz went negative [GO_REGION]
-33 stuck in stepping loop[GO_REGION]
-36 particle time difference exceeded BUNCHCUT [SIMULATE]
-39 r > r(cav) [ACCEL]
-40 r > r(rod) [TAPERED_ROD]
-43 Pz of particle is less than control variable PZMINTRK
-47 particle transverse position outside the kicker cavity
-52 particle decayed
-58 failed absorber hemispherical end region logic
-59 error computing field from current coil, sheet, or block
-61 momentum outside desired band for induction linac
-62 spin tracking error [GO_REGION]
-64 depolarization error [FLIP_ELASTIC]
-72 radius too large in HELIX
-73 pion had inelastic interaction (tracking stops)
-74 argument out of range in Bessel function I0 or I1
-75 argument out of range in Bessel function K0 or K1
-76 stepping gave result with r > 100 m or pt > 1000 GeV/c
-77 error in ACCEL model 10; two ref particles have same p?
-81 interpolated HORN point lies outside data grid
-82 position error in DIPOLE model 4
-85 failure of MOLIERE scattering algorithm
-86 got unphysical momentum computing hard-edge fringe field kick
-87 unphysical momentum from TRANSPORT matrix