# A High-field Solenoid for Targetry R&D

Harold G. Kirk
Brookhaven National Laboratory

MUTAC Presentaion
FNAL
January 15, 2003

Presentation Summary

1. Targetry Concept
2. High-field pulsed solenoid
   - Magnet System
   - Power Supply
   - Cryogenic System
3. Costs
4. Additional Options

# The Targetry Concept

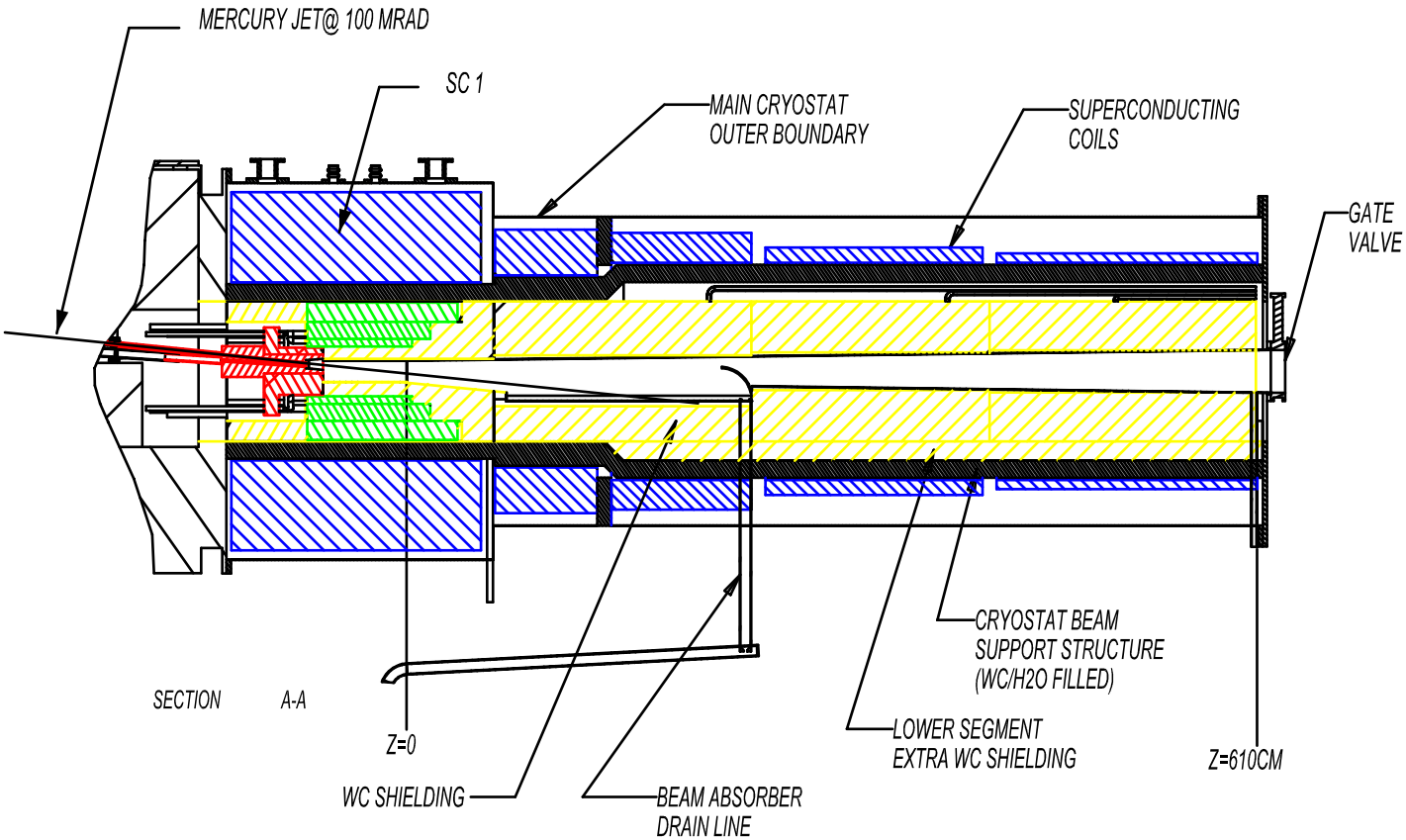


- Capture low-energy soft pions
- Use high-Z liquid mercury target
- Capture in a 20T solenoid field

# Pulsed High-field Solenoids

## Original Concept

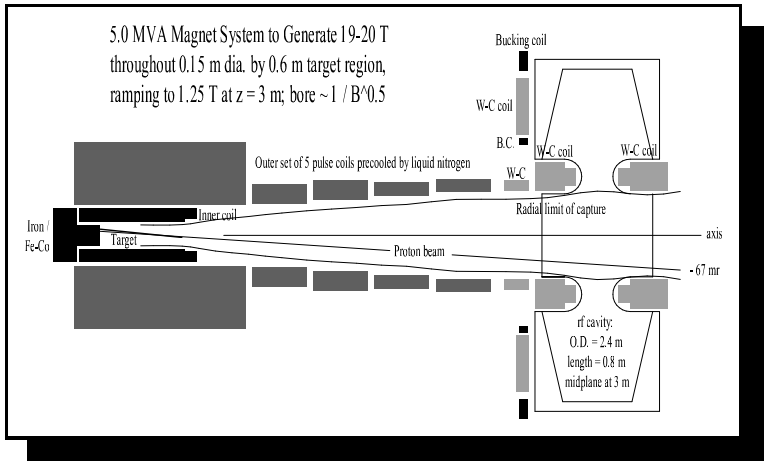


- 20T Peak Field
- 5 MVA Pulsed PS
- 15 Metric Tonnes Coil Package
- 80° K operation

## Revised Concept

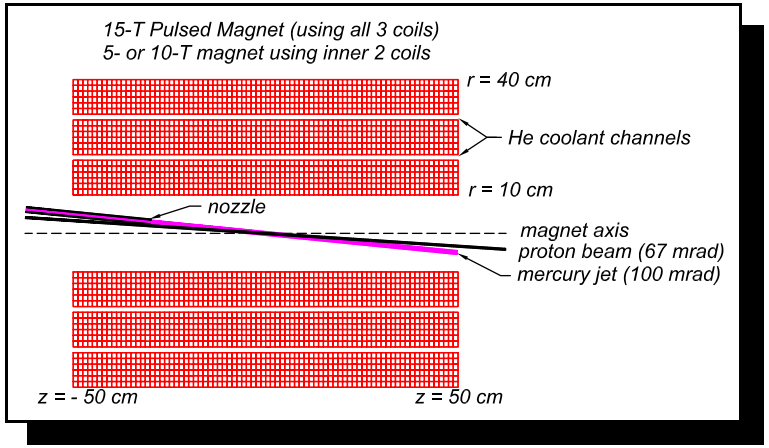


- 15T Peak Field
- 2.2 MVA Pulsed PS
- 3.6 Metric Tonnes Coil Package
- 30° K operation

# The Engineering Solution

Magnet System: Bob Weggel, BNL ; Peter Titus, MIT

1. Cryogenic Operations
2. Thermal Management
3. Mechanical Stresses

Power Supply: I. Marneris, BNL

1. Pulsed Operation
2. Controls

Cryogenics: M. Iarocci, BNL ; G. Mulholland, ACT

1. 30° Operations
2. Safety

# High-field Pulsed Solenoid

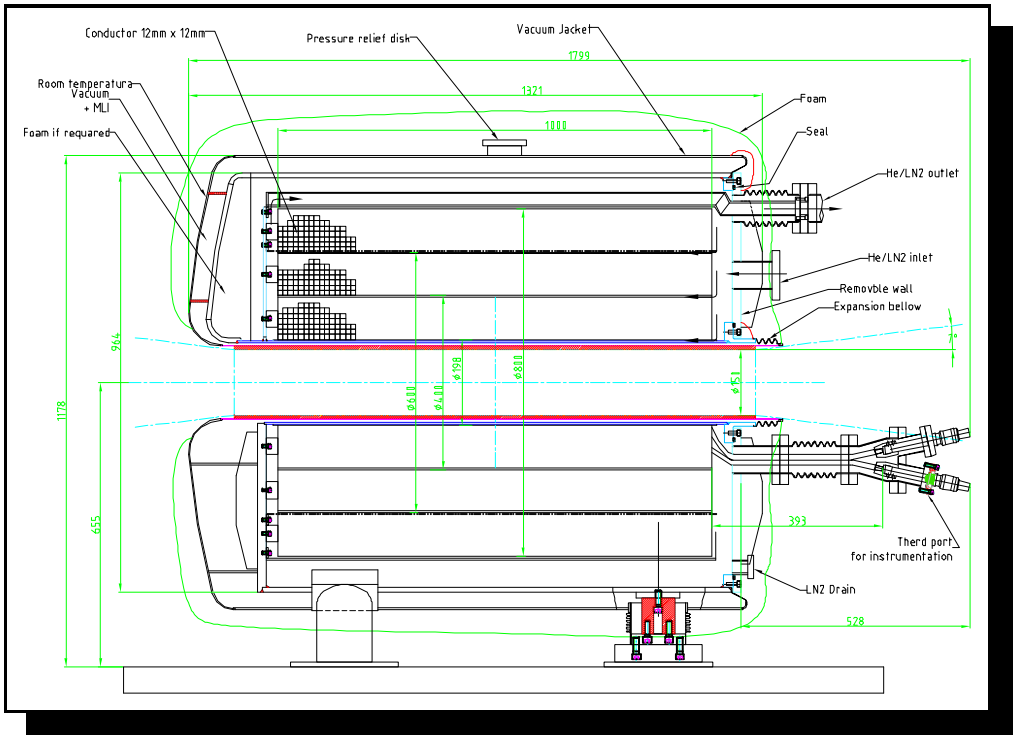


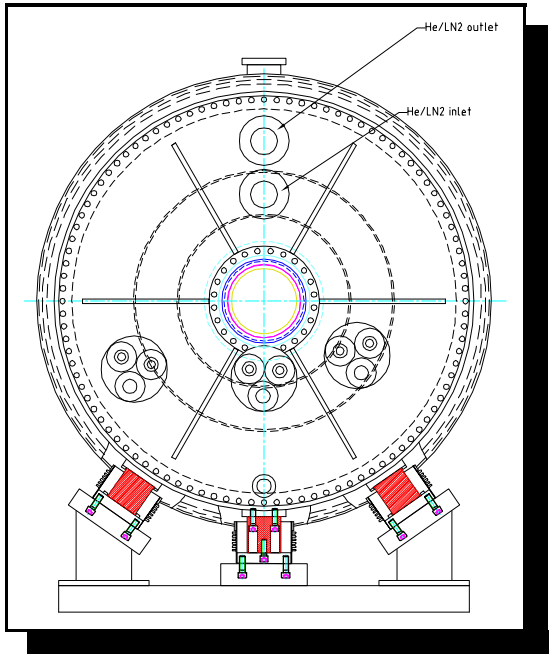


- 5T Peak field with 2 inner coils; 540 KVA PS; 84°
- 10T Peak field with 2 inner coils; 2.2 MVA PS; 74°
- 15T Peak field with 3 coils; 2.2 MVA PS; 30°

# ANSYS Analysis

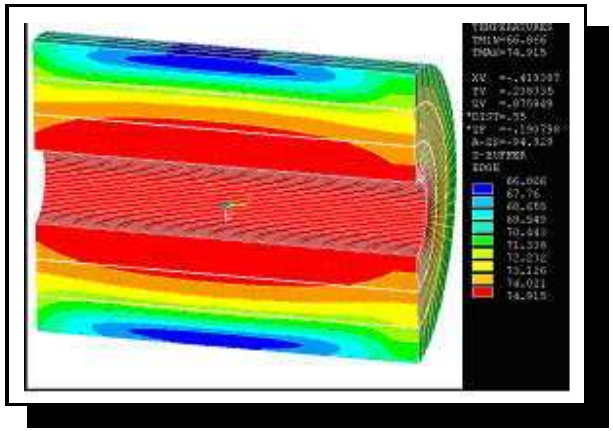

Temperature Profile

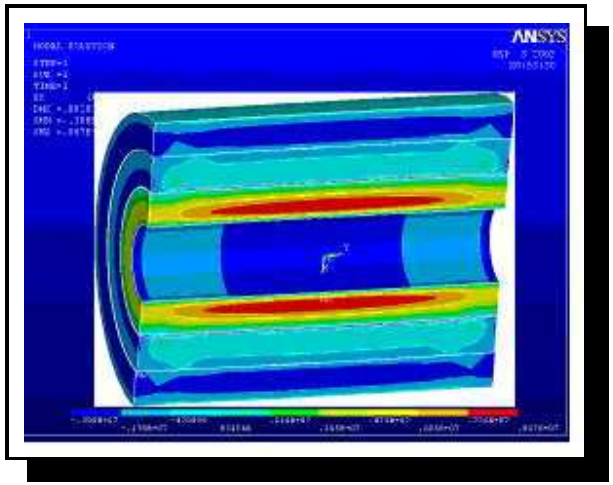


Radial Tension

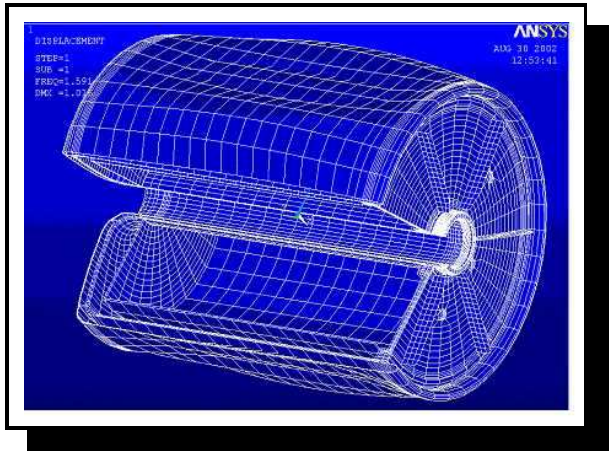


Buckling Analysis

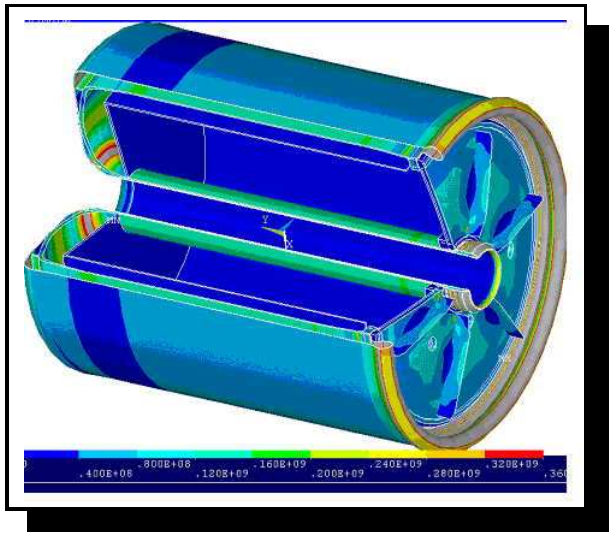

Rib Stengthened Cryo Vessel

# Solenoid Performance

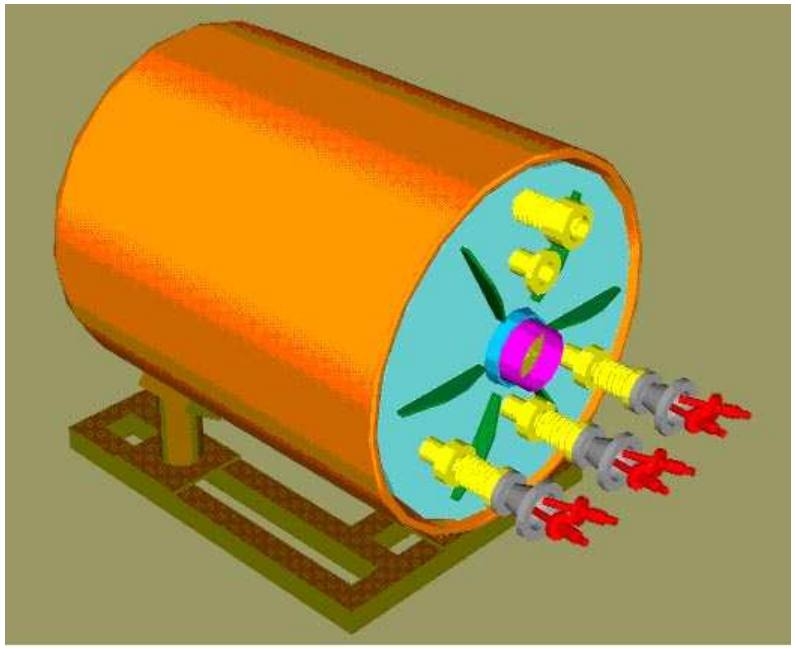

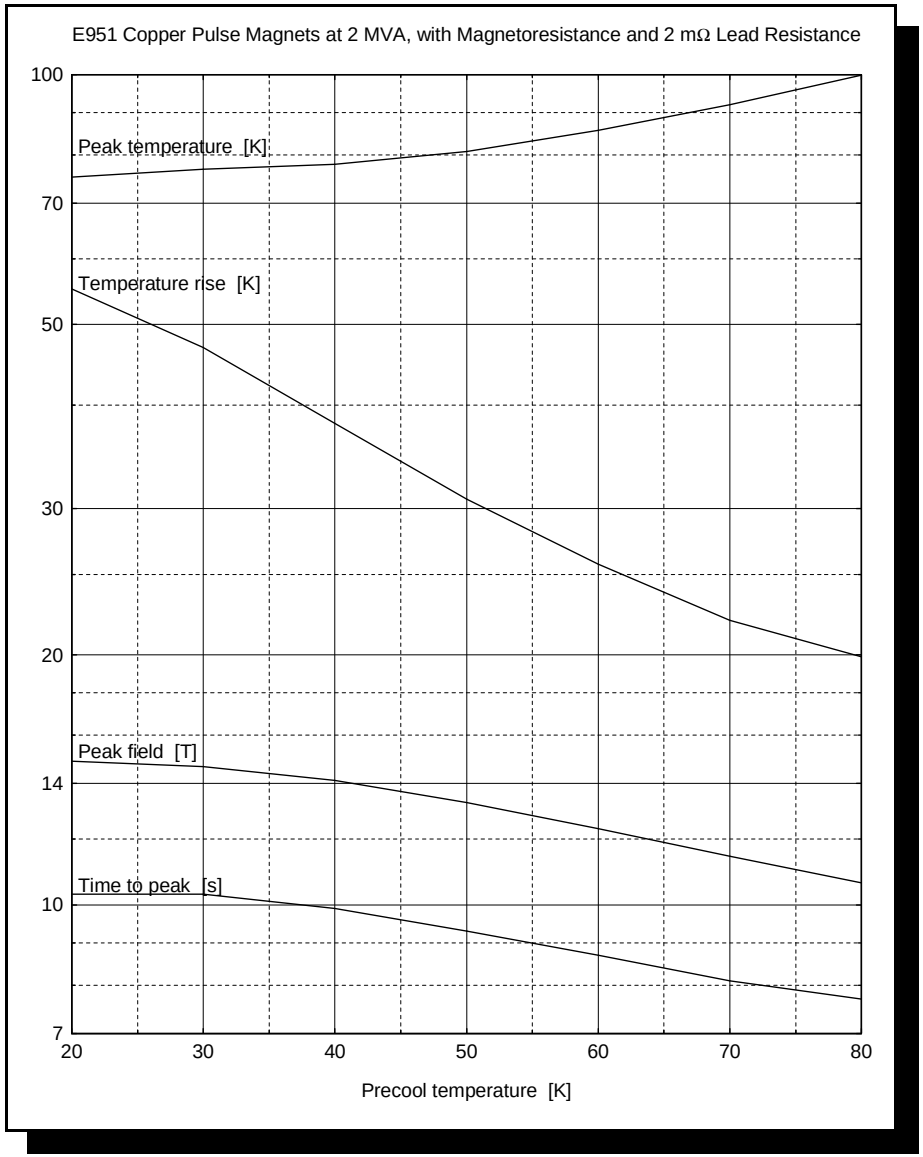


**Performance Summary**

| Peak Field | Coil Sets | Stored Energy | Initial Temp | Final Temp | Cycle Time |
|---|---|---|---|---|---|
| 5T | 2 | 3MJ | 84°K | 90°K | 3 Min. |
| 10T | 2 | 9MJ | 74°K | 96°K | 13 Min. |
| 15T | 3 | 15MJ | 30°K | 78°K | 25 Min. |

# Power Supplies at BNL

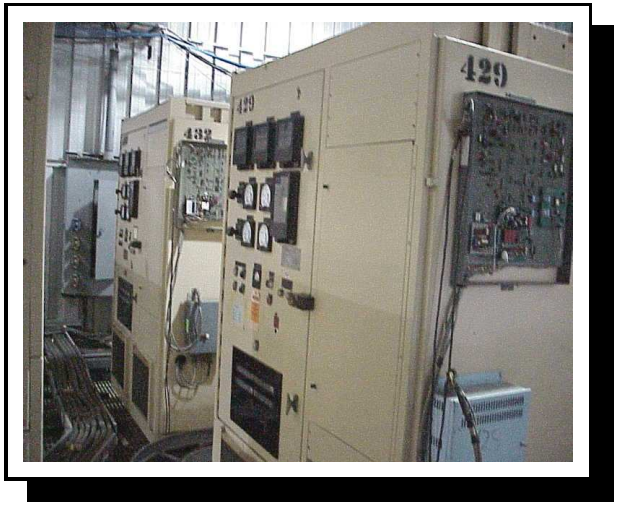


Existing 540 KVA Module

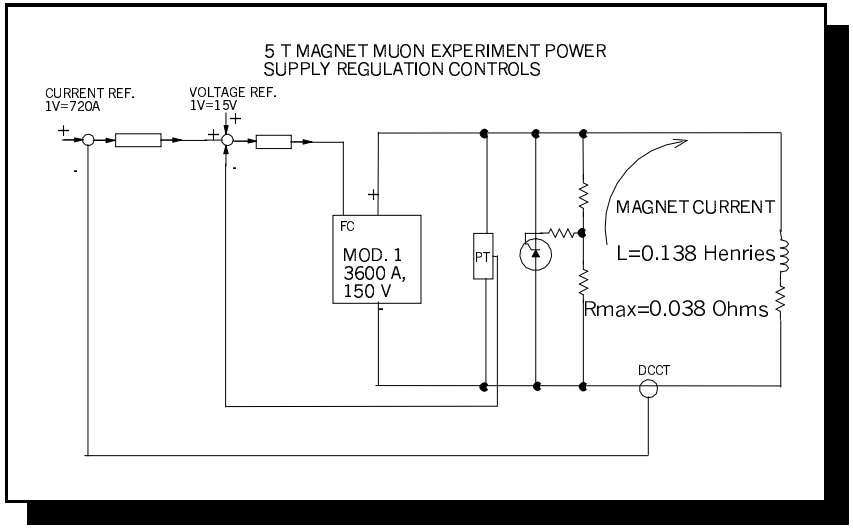


Single PS

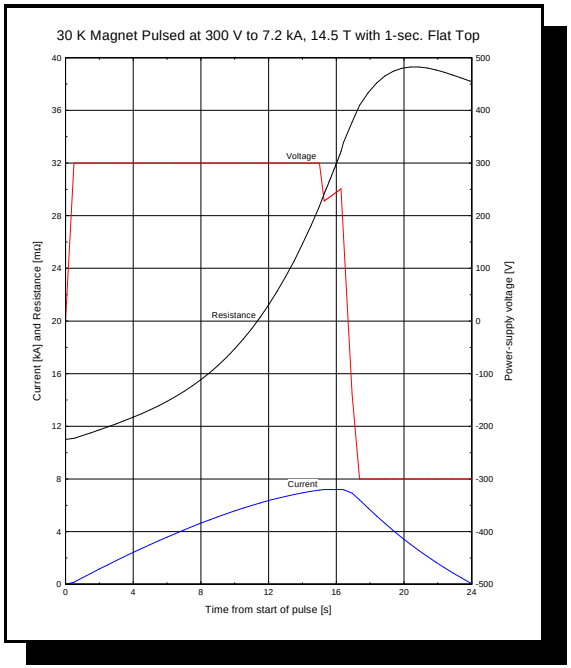


PS Performance

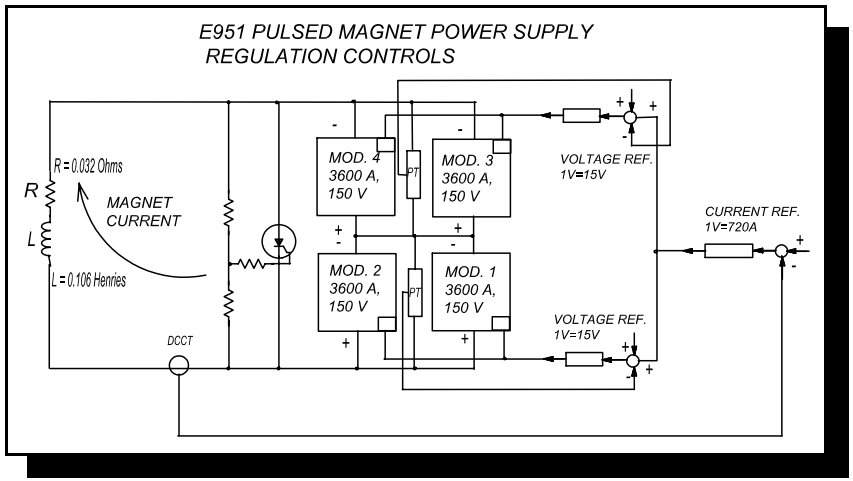


Four Ganged PS

# Cryogenic System

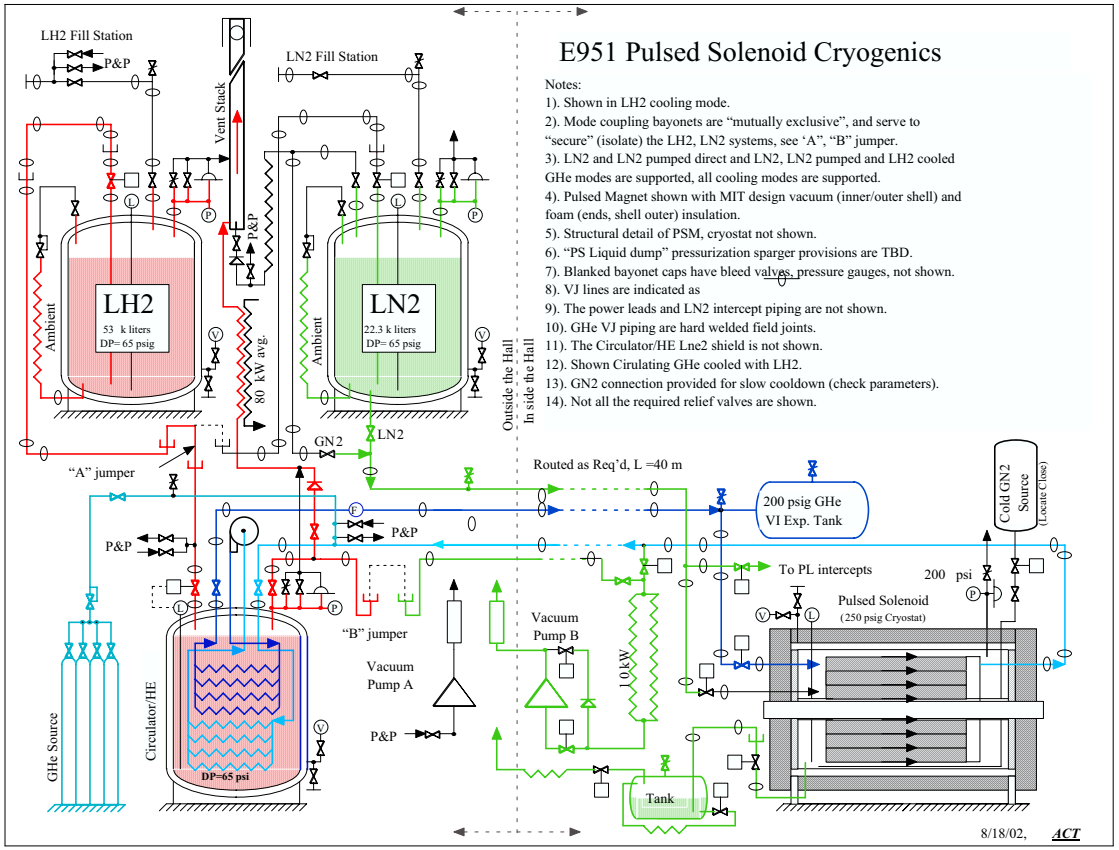

Heat Exchanger

14K Gal. $LH_2$ Dewar

# Cryogenic System Layout

## The E951 Experimental Area

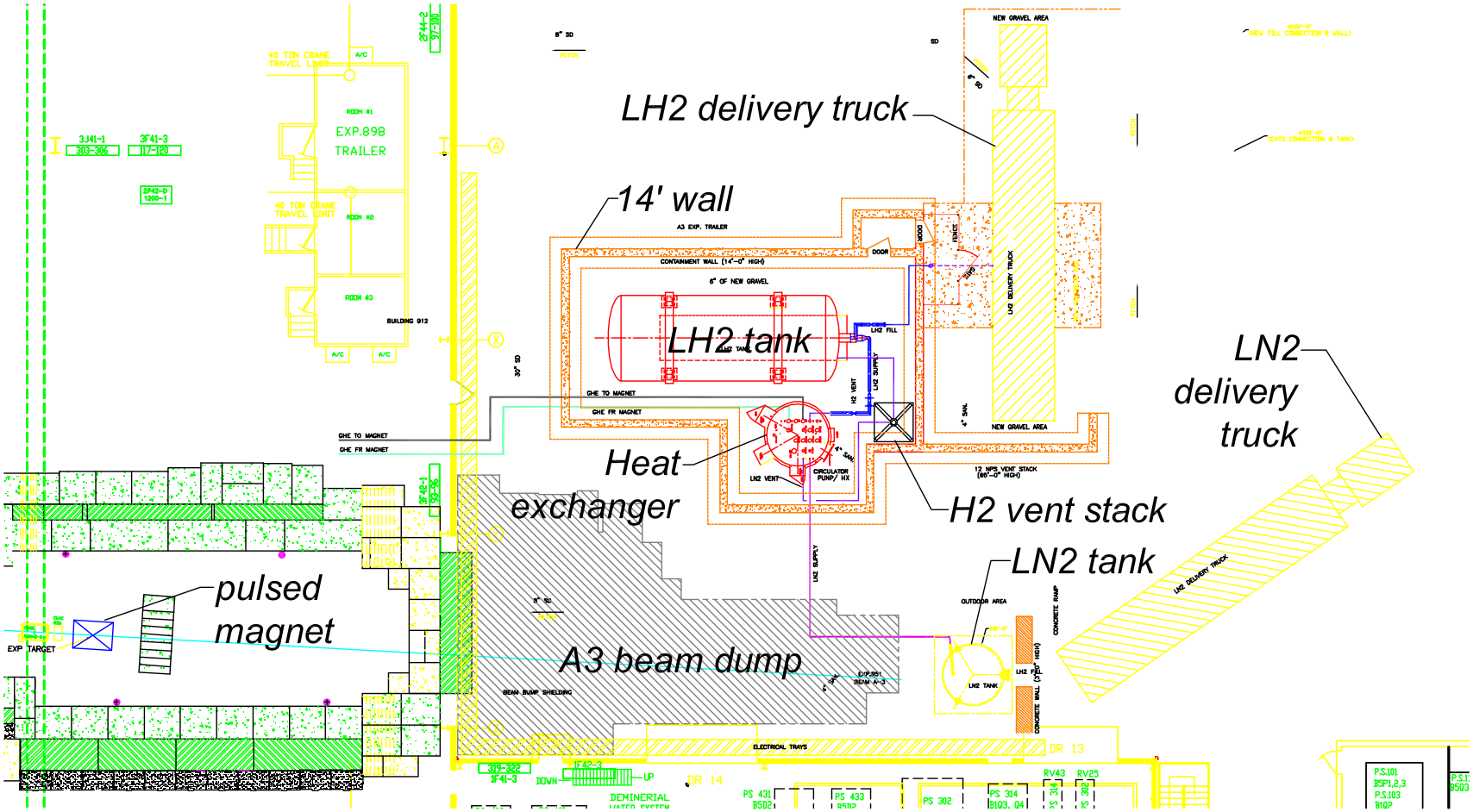

# Cryogenic Plumbing

## E951 Line Summary Diagram

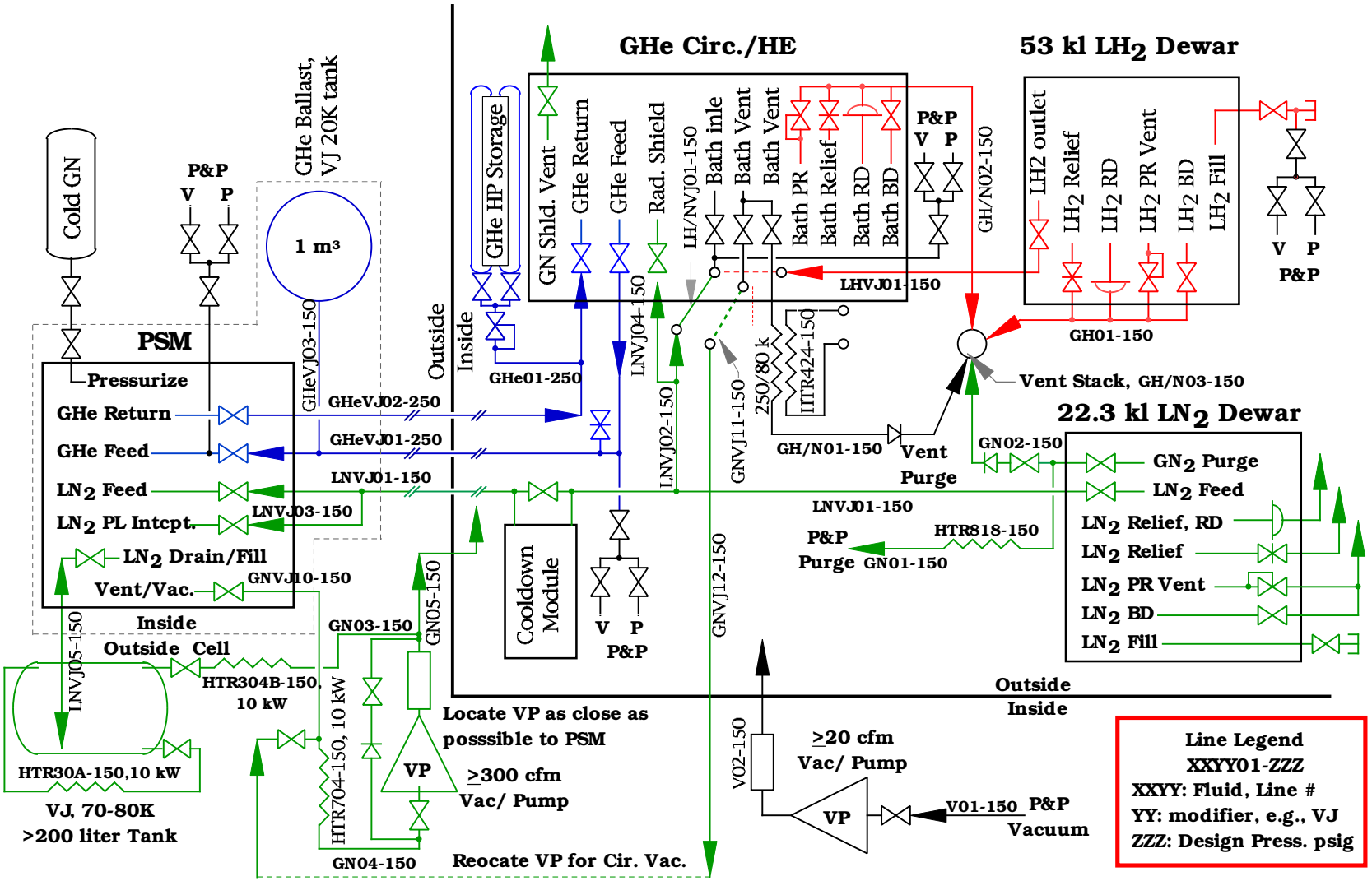

# Costs and Schedule

Cost Schedule

| | | Cost $ K |
|---|---|---|
| Magnet System | | |
| | Fabrication/Purchase | 425 |
| | Oversite/Monitoring | 55 |
| | Testing | 60 |
| | Sub-Total | 540 |
| Power Supply | | |
| | Engineering | 38 |
| | Fabrication | 499 |
| | Installation | 101 |
| | Sub-Total | 638 |
| Cryogenic System | | |
| | Engineering | 31 |
| | Fabrication | 788 |
| | Installation | 74 |
| | Sub-Total | 893 |
| Total | | 2071 |

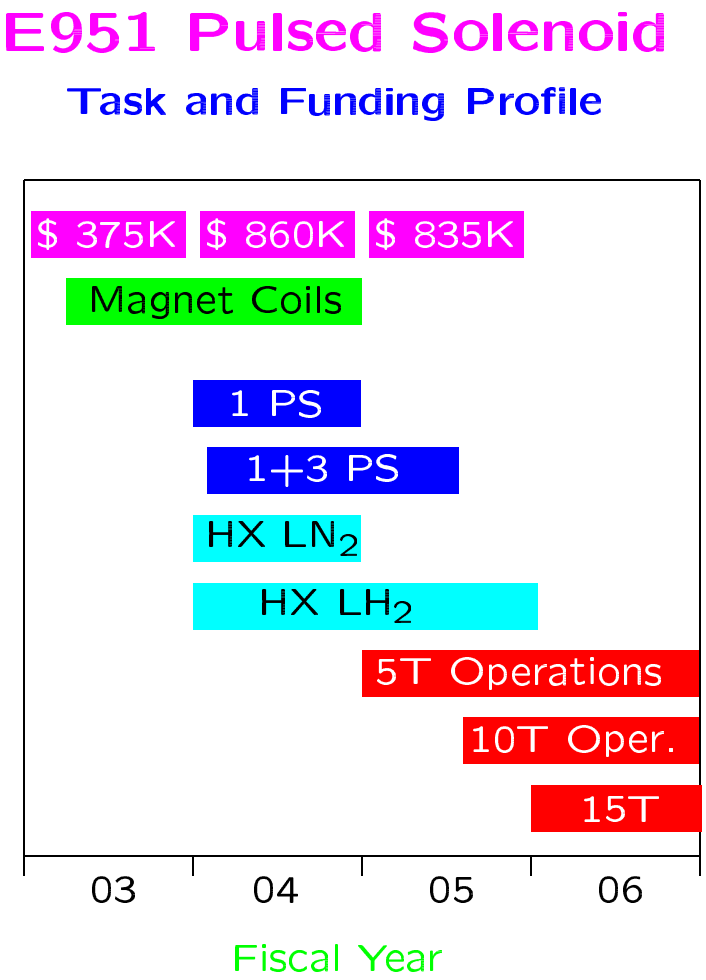

# Additional Scenarios

Case A

15T Peak Field

2.2MVA Power Supply BNL

30°K Operation

Case B

10T Peak Field

2.2MVA Power Supply BNL

74°K Operation

Case C

15T Peak Field

±600V-7200A PS– Satcon

70°K Operation

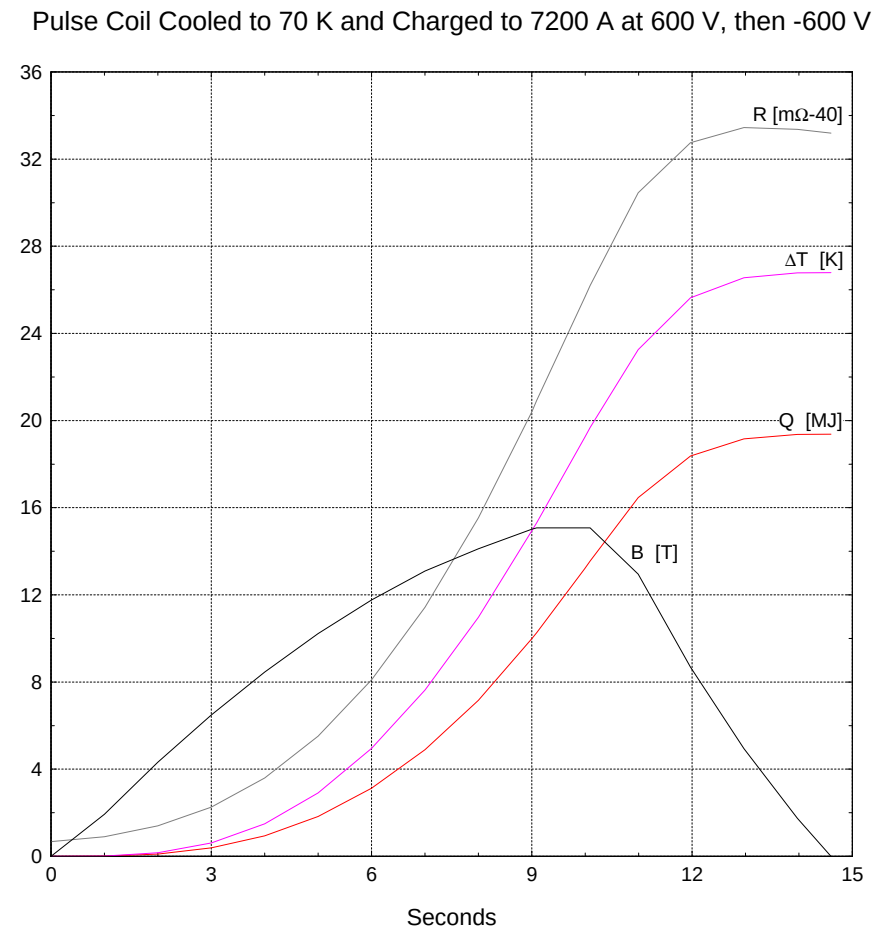

# Solutions without $LH_2$

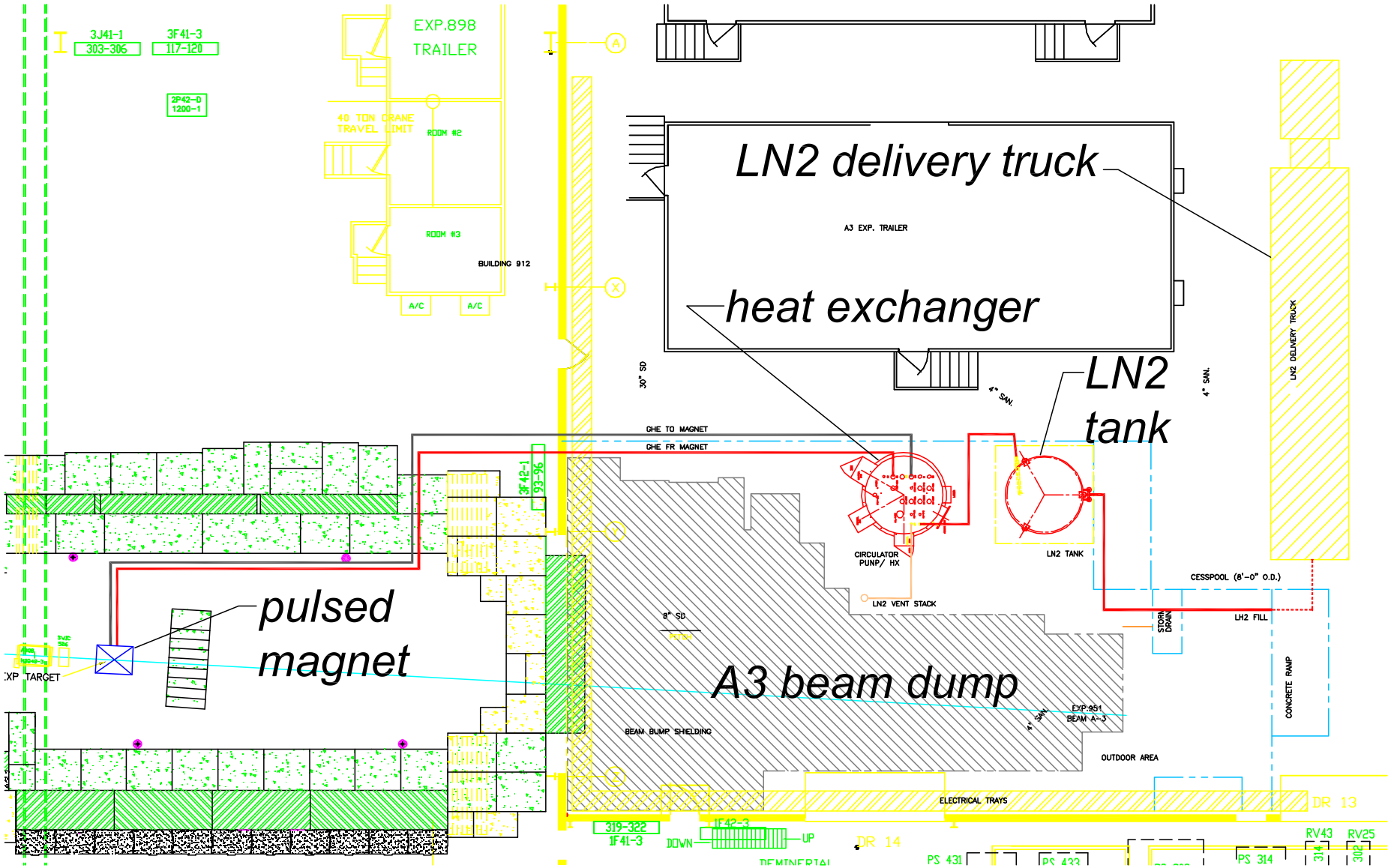

# Cost Comparisons

## Options

| | Case A | Case B | Case C |
|---|---|---|---|
| Peak Field | 15T | 10T | 15T |
| Cryo | $LH_2$ | $LN_2$ | $LN_2$ |
| Power | 2MW | 2MW | 4MW |
| Magnet System | 540 | 378 | 540 |
| Power Supply | 638 | 638 | 788 |
| Cryogenic System | 893 | 556 | 556 |
| Total | 2071 | 1572 | 1884 |

# Conclusions

- 15T, 30°K, 2.2 MVA system can be built at BNL for $2.0M
- 10T, 74°K, 2.2 MVA system can be built at BNL for $1.6M
- 15T, $LN_2$ only, 4.4 MVA power supply solution is competitive and site independent
- Additional power supply options are being explored
    - Capacitor Bank
    - Battery Bank